VAN DER VALK
SOLAR SYSTEMS

Installation manual

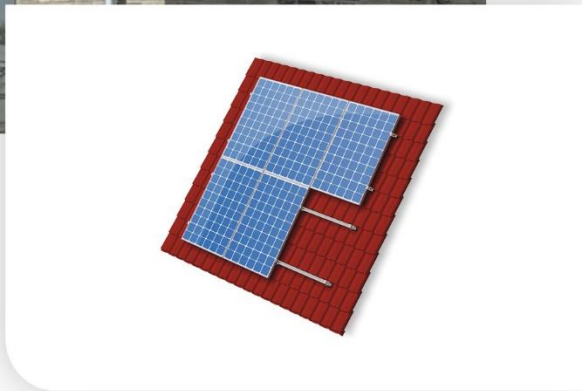

ValkAce

Version: v2.3
Date: 13-03-2025

Disclaimer

This installation manuals needs to be stored for future use. For project specific guidelines and recommendation it is required to use this document in conjunction with the “Project report” generated by the ValkPVplanner. The instructions provided in this Project Report must be strictly observed at all times.

The content of this installation manual has been carefully compiled. Van der Valk Solar Systems does not accept any liability for the correct use of this document. Van der Valk Solar Systems hold the right to update the content of this document without further notice. Please check the website of Van der Valk Solar Systems (www.valksolarsystems.com) for the most recent version of this document.

For the warranty conditions of your installation, please contact your supplier. Further we refer to our General Terms and Conditions, that are available upon request.

General installation guidelines

General

- During installation of the solar mounting system, the instructions and safety precautions presented in this installation manual must be followed carefully. As also stated in the General terms and Conditions of sale and delivery of Van der Valk Solar Systems B.V., non-compliance with the installation guidelines in this document means that the customer can no longer invoke any warranty and Van der Valk is no longer liable for any form of damage.
- The information, comments and advice in this document are binding. Van der Valk Solar Systems reserves the right to update this document without further notice.

Safety

- The installation of the mounting system must be carried out by qualified technical personnel.
- Omitting parts may negatively affect performance and is therefore not allowed.
- Avoid carrying out installation work during bad weather conditions, especially in case of strong winds and a wet (slippery) roof surface.
- During the planning and execution of the installation, always take into account possible changing weather conditions, in particular strong winds or storms. Take the right measures and make sure that no situation can arise where solar panels have already been placed on the system, but other essential parts are still missing.
- During installation work on the roof, always use fall protection and, if necessary, work with safety nets and roof edge protection.
- Always wear appropriate protective clothing and gloves when carrying out the installation work.
- Follow the guidelines in the publication “Health & safety in roof work”.

Environmental factors

- High neighbouring buildings or objects, such as windmills, can affect the wind pressure. In these cases, advice should always be obtained from Van der Valk Solar Systems before installation can take place.
- If during the installation it is determined that the project data and/or environmental factors do not fully correspond to the project report, the project must always be re-calculated first.
- In coastal areas, the system should be placed at least 500 meters from open water to prevent accelerated corrosion by the action of salt water. When buildings are present between the open water and the roof, a minimum distance of 250 meters from open water may be maintained.

Standards and regulations

- For correct and safe installation and use of the solar mounting system, always observe the applicable standards and regulations:
- EN 1990: Basis of structural design
- EN 1991-1-3: General actions: snow loads
- EN 1991-1-4: General actions: wind loads
- IEC 60364: Electrical Installations for Buildings
- IEC 62305: Protection against lightnings
- EN 50110: Operation of electrical installations
- Working Conditions Act and Safe Working Conditions Regulation

Stability and condition of the roof and roof covering

- The roof pitch should be less than 5 degrees for flat roof systems and between 5 degrees to 75 degrees for pitched roof systems.
- The condition of the roof must be checked upfront for sufficient strength to bear the weight of the mounting system including PV panels ballast and wind and snow loads. Make sure that the load reserve of the roof is not exceeded anywhere.
- Check the stability of the roof and adjust the roof/construction where necessary.
- Check prior to installation whether the roof covering and/or insulation is suitable for the pressure and thermal expansion of the solar mounting system. The maximum pressure is shown in the project report of the ValkPVplanner or can be requested at Van der Valk Solar Systems.
- Bulging of the roof membrane should be prevented. This can lift the solar mounting system and can cause displacement of the mounting system or ballast. It is the installer's responsibility to prevent the roof membrane from bulging.
- Factors such as overhead cranes, seismic activity and others that affect the stability of the roof and/or building can affect the installed solar mounting system. Van der Valk Solar Systems does not take these factors into account, unless confirmed in writing.
- The roof surface on which the solar mounting system is to be installed must be clean, dry and flat.
- The roof height may not exceed 25 meters in case the project has been calculated in the ValkPVplanner must be corresponding to the roof height in the project report. For installations on roofs higher than 25 meters, Van der Valk Solar Systems should always be contacted in advance.

Roof zones

- When installing the solar mounting system, always take the applicable roof zones according to EN1991-1-4 into account. Placing solar panels in the edge zone of the roof (the distance measured from the roof edge, which is equal to 1/5 of the building height) is only possible if this has been explicitly taken into account in the calculation.
- It is possible to position panels in the edge zone of the roof in the ValkPVplanner (calculation software), on the basis of which the required additional ballast or fixation points are automatically calculated. This can only be done using "Satellite" or "White Map" design mode. The edge zone is automatically calculated by the ValkPVplanner, based on the roof height and building circumference, in accordance with the applicable regulations. In case the design mode "Simple mode" is used, the calculation always assumes that the solar panels are in the middle zone of the roof only.

Dilatations

- The maximum allowed dimensions of a coupled mounting system is a 30 meters in the aluminium direction and 60 meters in the steel direction. The maximum dimensions are based on the thermal expansion in case of a maximum temperature difference (Delta T) of 70 degrees Celsius.
- The coupled mounting system must not be placed over a gutter or ridge. In the mounting system is place over a gutter or ridge, the system must be split (dilatation).
- When using the extra wide panel support feet for ValkPro+ with ballast, different dilatation rules apply: in such installations the coupled system may be a maximum of 30 meters in the steel/roof carrier direction and 15 meters in the aluminium direction.

Solar panels

- It is the responsibility of the installer to determine in advance whether the selected solar panel is suitable for the mounting system in terms of dimensions and pressure loads. The calculated loads on the solar panel are shown in the project report of the ValkPVplanner or are available on request at Van der Valk Solar Systems.

Cable management

- In order to create a sound and durable electrical connection between the solar panels, it must be ensured that the cables from the junction box have sufficient length and thus do not cause any mechanical stress on the cable glands. Take into account thermal expansion and contraction of cables and the mounting system.
- Cables and connectors must be kept away from sharp and/or abrasive parts and the roof surface by using sufficient and appropriate cable clamps and cable baskets.

Disassembly and Removal

- Components of the solar mounting system can be easily and completely disassembled at the end of their service life and separated for recycling. The systems only contain nut and bolt, screw and click connections, so nothing is glued or welded. All materials are fully recyclable. Disposal of the components always in accordance with the locally applicable laws and regulations.

Table of contents:

Disclaimer	Page 01-03
Table of contents	Page 04
Recommended tools	Page 05
Required materials for ValkAce	Page 06-07
Overview standard roof structure	Page 08
Overview roof hooks ValkAce	Page 09-10
Mounting ValkAce Smartline roof hook	Page 11-12
Mounting ValkAce Slimline roof hook	Page 13-14
Mounting ValkAce Strongline roof hook	Page 15-16
Mounting ValkAce profile	Page 17-18
Coupling ValkAce profiles	Page 19
Mounting ValkAce cable and connector clips	Page 20
Plastic cable entry for roof tiles	Page 21
Mounting micro-inverter clip	Page 22-23
Mounting ValkAce panel clamps (side)	Page 24-25
Mounting ValkAce panel clamps (middle)	Page 26
mounting ValkAce end caps	Page 27
Mounting ValkAce optional items	Page 28-31

Required tools for installing ValkAce on pitched roofs with tiles

Cordless drill

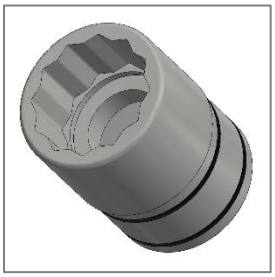

Socket 13mm

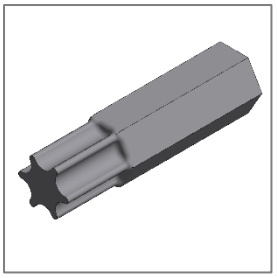

Torx bit T-30
(789530)

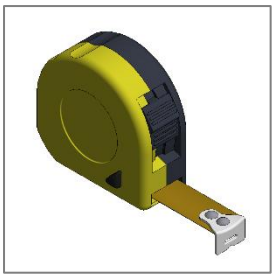

Measuring tape

Materials for installing ValkAce on pitched roofs with tiles

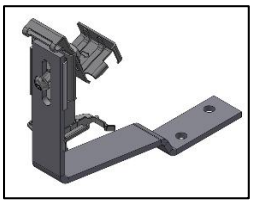

ValkAce Smartline roof hook
747502

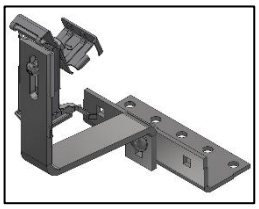

ValkAce Strongline roof hook
747506

Construction wood 730mm
75400730

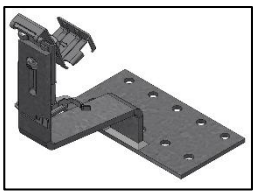

ValkAce Strongline Heavy Duty roof hook
747504

Ss torx-screw 5,5x38mm
773840

Ss torx-screw 5,5x58mm
773360

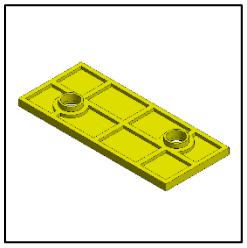

Plastic shim 3mm for Smartline roof hook
739003

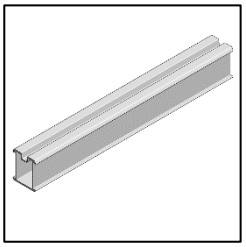

ValkAce profile
(7019…..*)
*see table

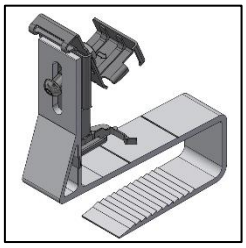

ValkAce Slimline roof hook
729505

Profile length	Art no.
1220 mm	701901220
2370 mm	701902370
3520 mm	701903520
4670 mm	701904670
5820 mm	701905820

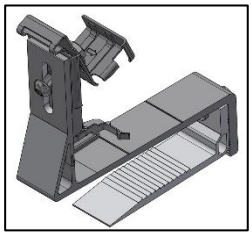

ValkAce Slimline roof hook adjustable
729501

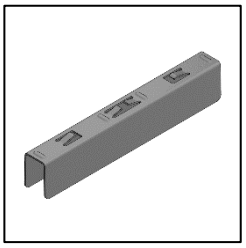

ValkAce coupling for profiles
749502

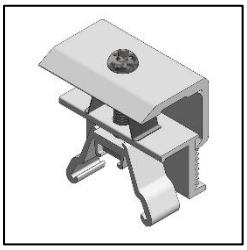

ValkAce clamp side
721412 - Grey
721412ZW - Black

ValkAce clamp middle
721410 - Grey
721410ZW - Black

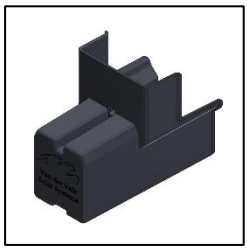

ValkAce end cap
739060

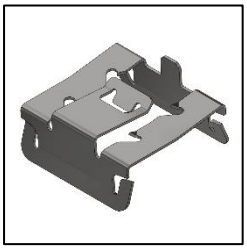

ValkAce microinverter mounting clip
739062

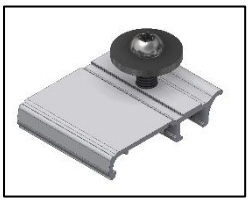

ValkAce inverter clamp
721440

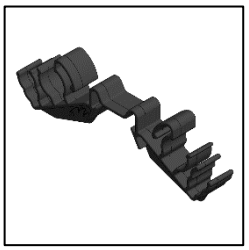

ValkAce cable and connector mounting clip
739061

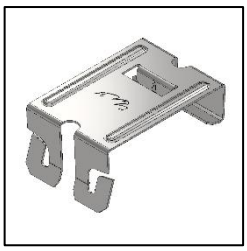

ValkAce earthing clip
739064

Plastic cable entry for roof tiles
739063

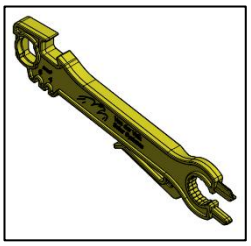

ValkAce disassembly tool
739065

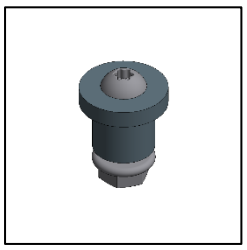

Plastic panel alignment pins
733020

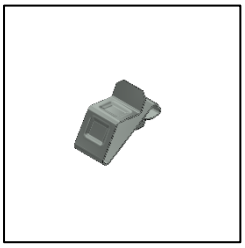

Ss. cable clamp small
732001

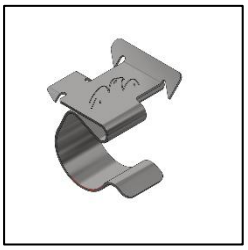

Ss. connector clamp
738201

Overview standard roof structure

The ValkAce mounting system can be installed on a pitched roof with “standard” roof tiles. In this manual references are made to specific roof structure elements. In the image below, these elements are highlighted.

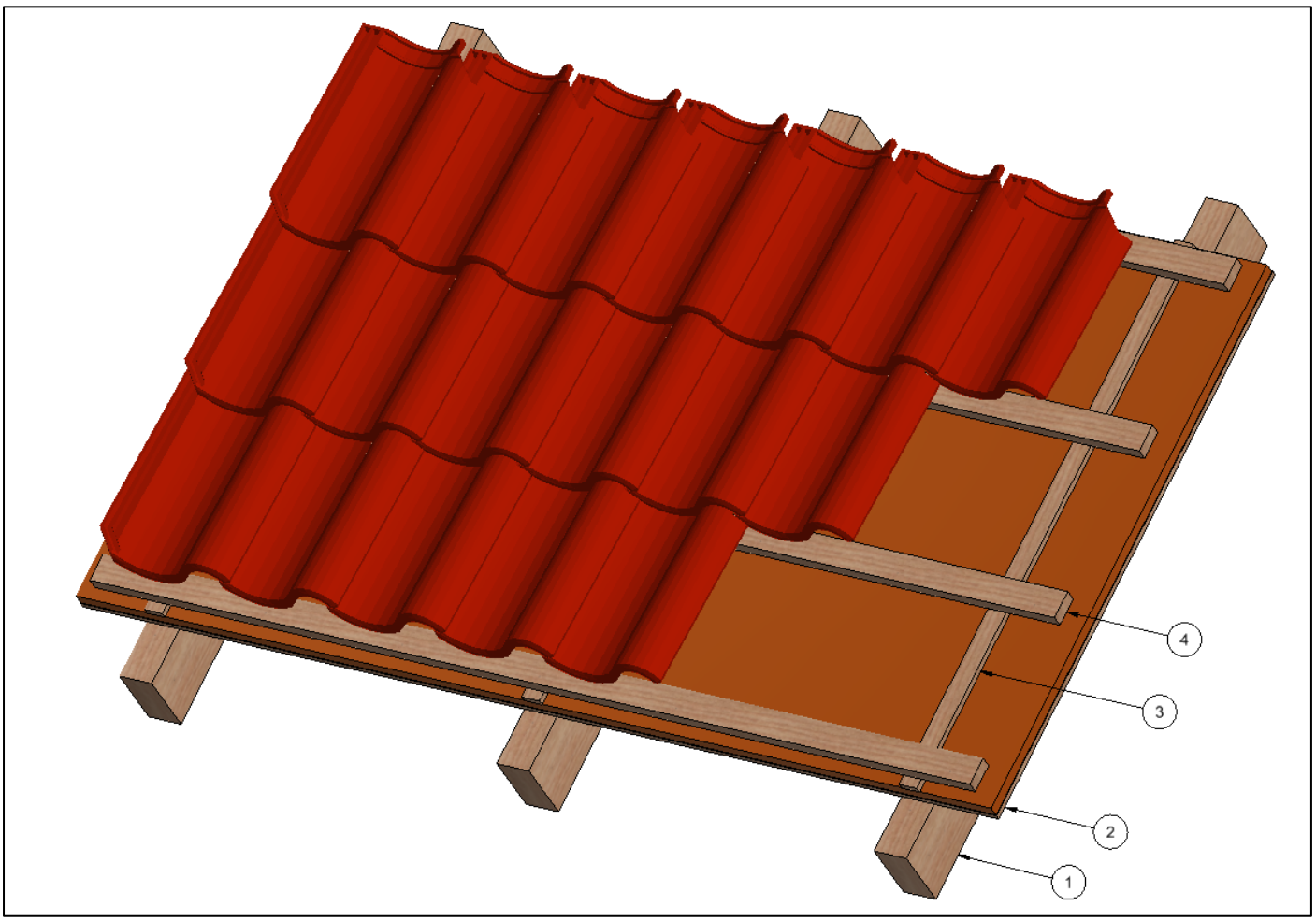

1) Rafters
   The rafters are the structural beams that give the roof it’s shape and strength.
2) Roof boarding
   The roof boarding is the waterproof layer of the roof. In most cases the roof boarding also contains insulation.
3) Battens
   The battens are holding the layers on the roof together. The battens are fixed through the roof boarding into the rafters. On the rafters the battens are mounted.
4) Purlins
   The purlins are fixed on the battens. The purlins are used as support and fixation of the roof tiles.

Overview of ValkAce roof hooks

Turning roof hook bracket to installation set up

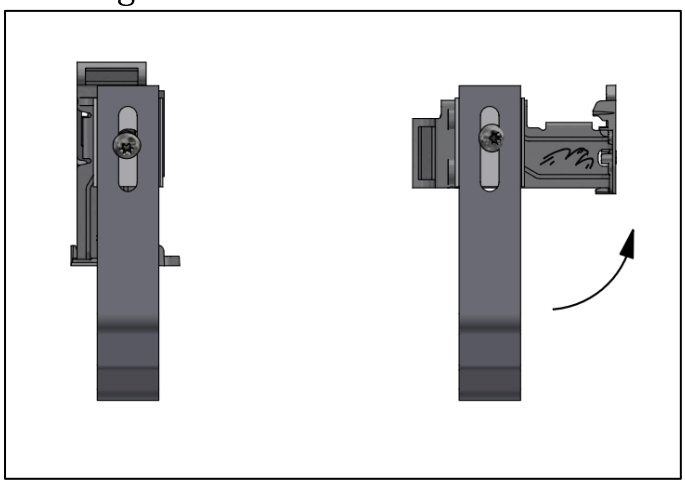

When unpacked, the ValkAce roof hook is not yet in the correct installation set up. Turning the bracket by 90° puts it in the correct position. Using the two alignment lips, the bracket is at right angle to the roof hook.

Make sure the bracket is not pressed down before installing the profile to the roof hook. The spring effect will be lost as a result. If this does happen, it can be repaired by loosening the bolt-nut connection and putting the bracket back under tension. This does not cause any reduction in performance.

ValkAce Smartline roof hook

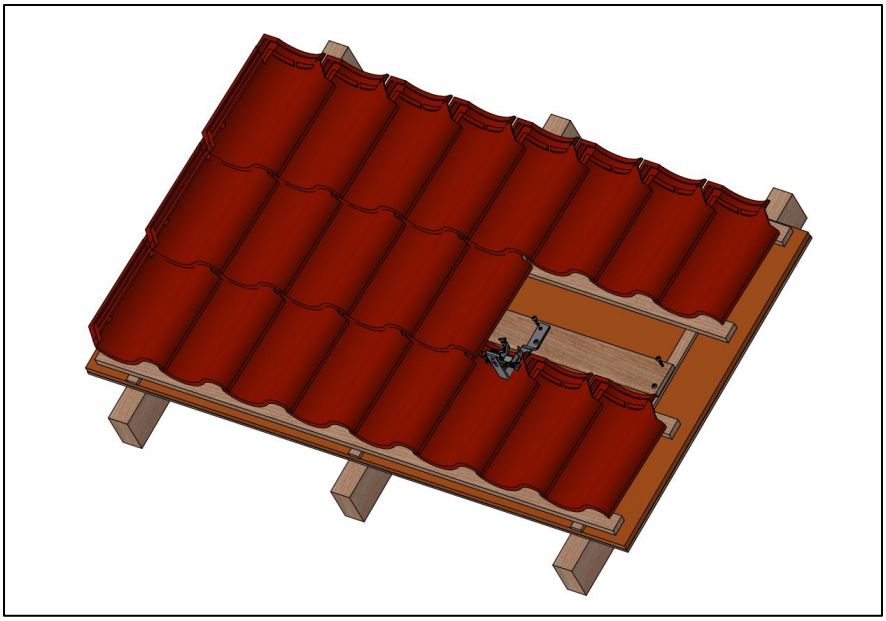

The ValkAce Smartline roof hook is fixed to the roof structure by means of screws. First a wooden plank is mounted onto the battens of the roof, then the roof hook is fastened to the plank.

ValkAce Slimline roof hook

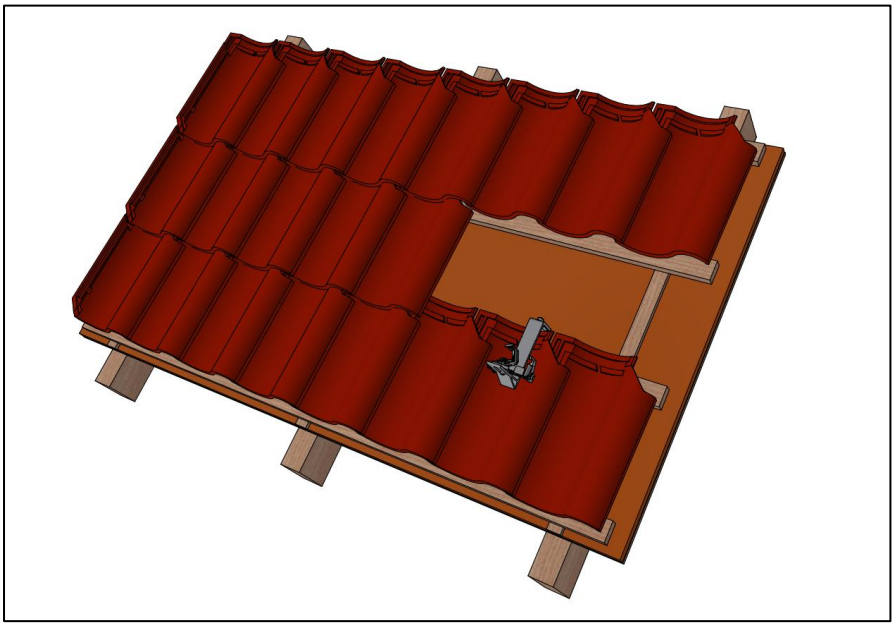

The Slimline roof hook is not fixed to the roof structure with screws. It is placed over the roof tile and purlin supporting the tile. The advantage of the Slimline roof hook is installation speed. However, since the Slimline roof hook is not fixed to the roof structure, the impact forces that the system can withstand are lower compared to systems with fixed roof hooks.

Strongline (Heavy Duty) roof hook ValkAce

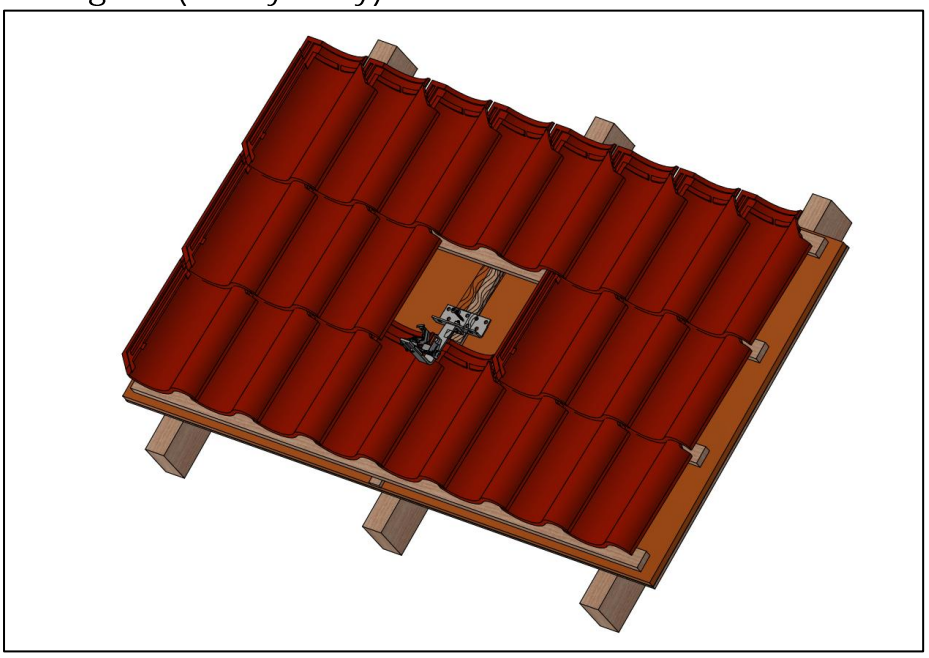

The ValkAce Strongline and Strongline Heavy Duty roof hooks are to be fixed to the rafters of the roof structure. The base plate has multiple mounting holes that can be used for the screws that go into the wooden rafters.

The ValkAce Strongline, hook can be connected to the base plate in three positions, to offer adjustability side.

The ValkAce Strongline Heavy Duty hook is welded to the mounting plate for higher strength, but therefore offers no height or sideway adjustability on the mounting plate.

Installation of ValkAce roof hooks

ValkAce Smartline roof hook

Remove the tiles for access to the roof structure. Place the wooden plank

Fix the wooden planks over the rafters with at least 4 screws.

The roof hook is fixed on the wooden plank, using the same type of screws. Ensure the roof hooks are properly aligned, so the profile can be mounted correctly.

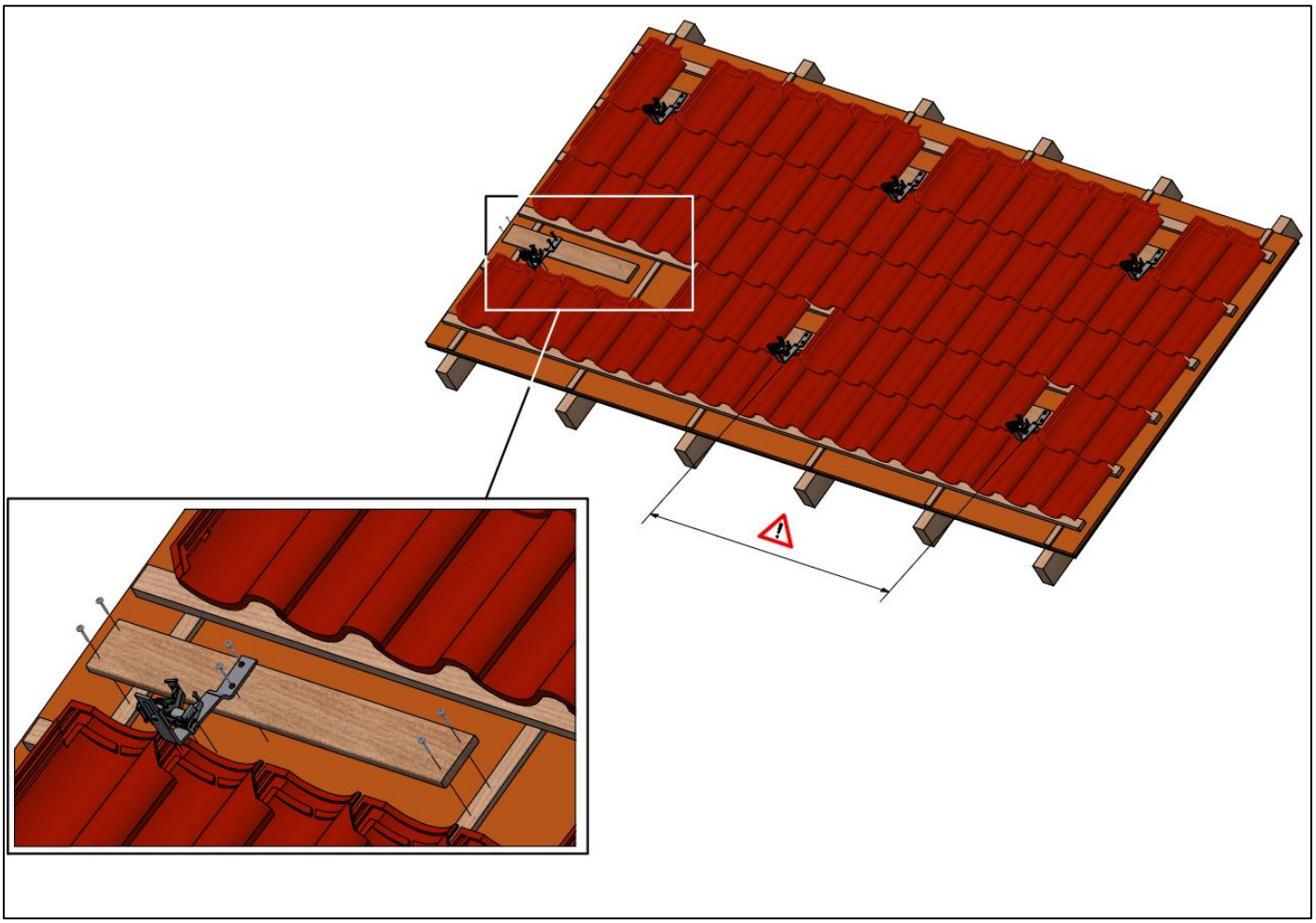

Check the ValkPVplanner project report for the required amount of roof hooks and maximum distance between the roof hooks.

It is important that the Smartline roof hook has 3 mm clearance from the roof tile underneath. If this is not the case, special plastic yellow plates (739003) can be added between the wooden plank and the roof hook (see image below).

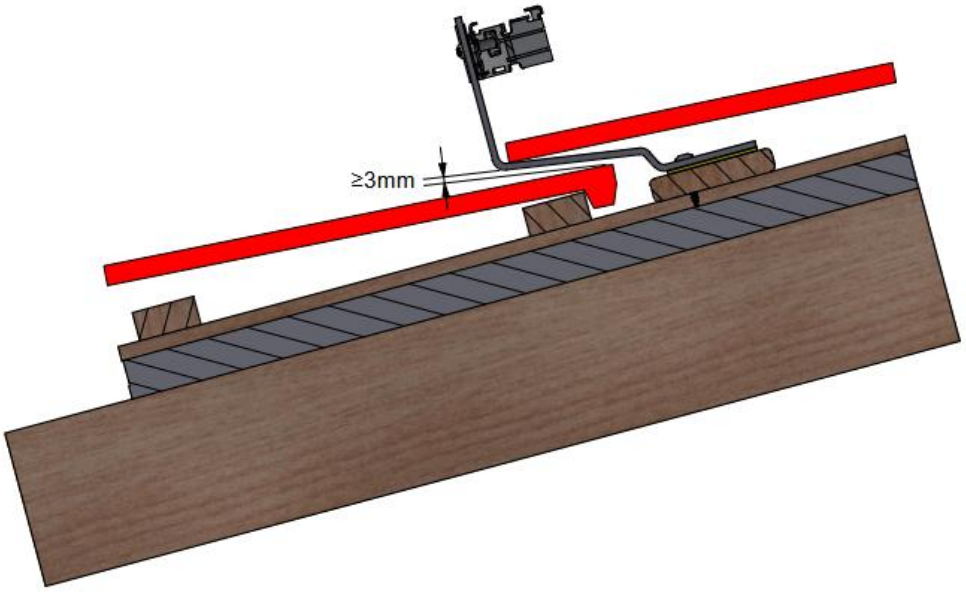

Slimline (adjustable) roof hook ValkAce

The Slimline roof hooks ValkAce are placed over the roof tile and the battens. When using the adjustable hooks, make sure the roof hook is set to the correct thickness (see image next page). Ensure the roof hooks are properly aligned, so the profile can be mounted correctly.

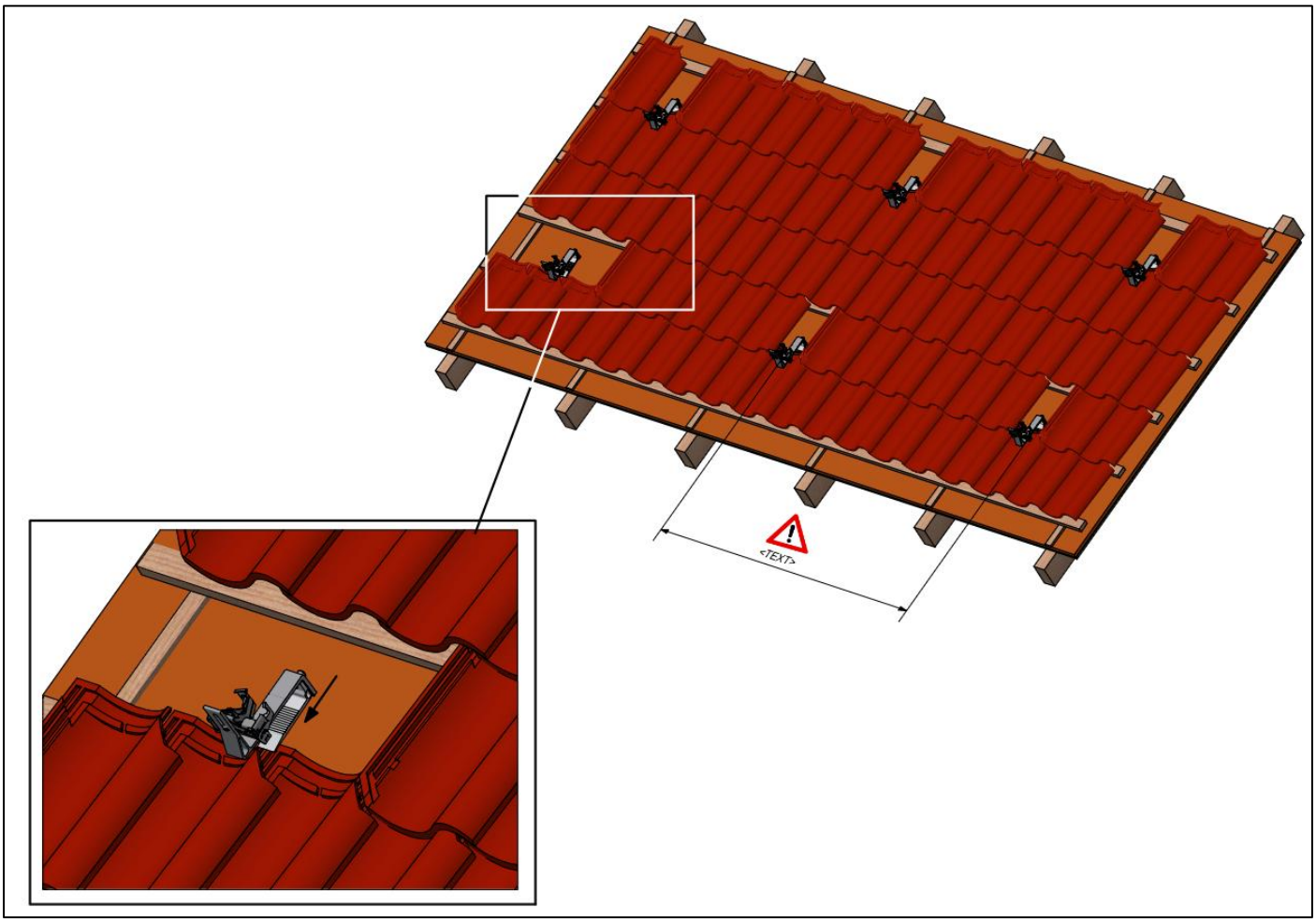

Check the ValkPVplanner project report for the required amount of roof hooks and maximum distance between the roof hooks.

The adjustable Slimline roof hook can be set to the required thickness (tile + batten). Make sure the roof hook is tight enough around the tile and batten. Otherwise, adjust the roof hook to increase tightness. Once the thightness has been determined, set the remaining roof hooks to the correct thightness before installation on the roof.

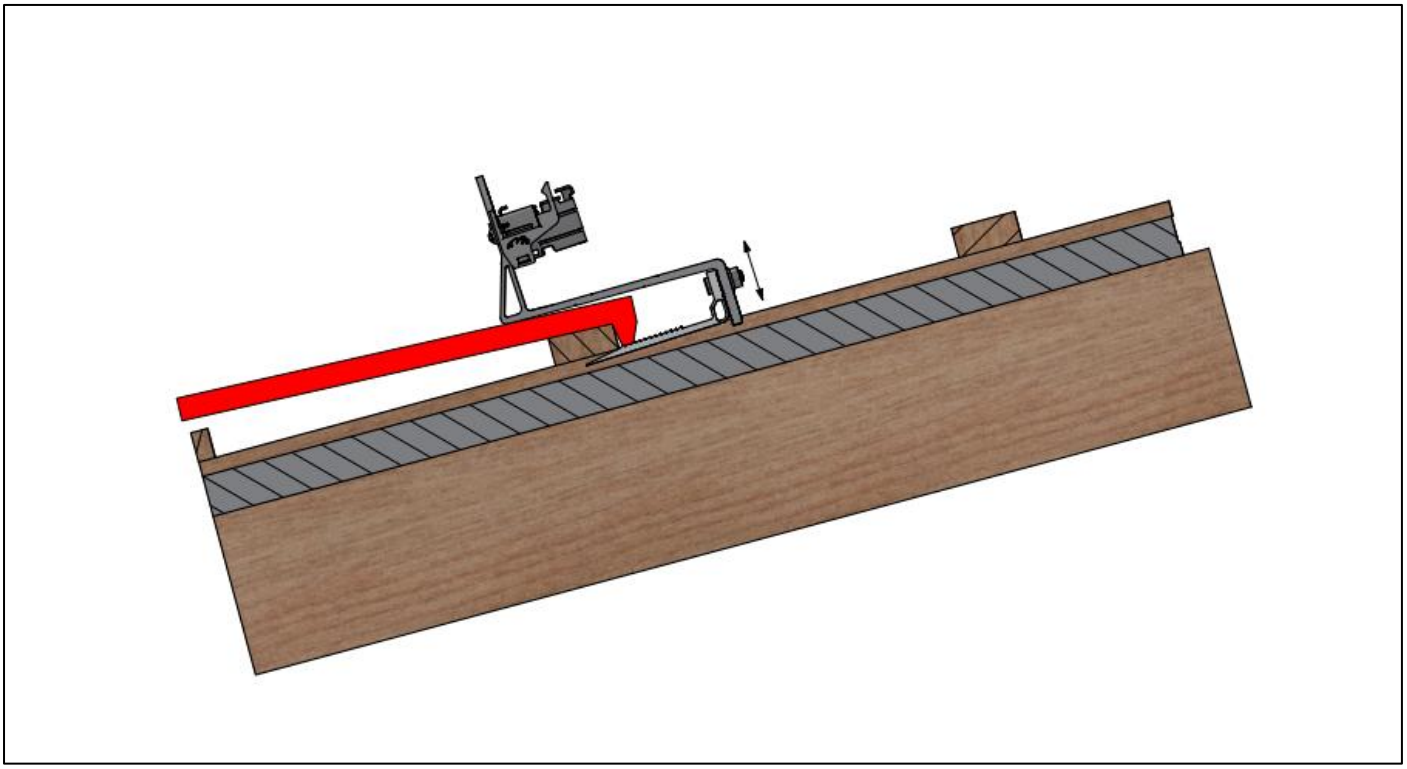

Strongline (Heavy Duty) roof hook ValkAce

The Strongline (Heavy Duty) roof hook ValkAce is mounted on the purlins of the roof. Use the holes of the mounting plate and the adjustable position of the hook to place the hook in the correct position. The Strongline (Heavy Duty) roof hook must be fixed with 2 screws at minimum.

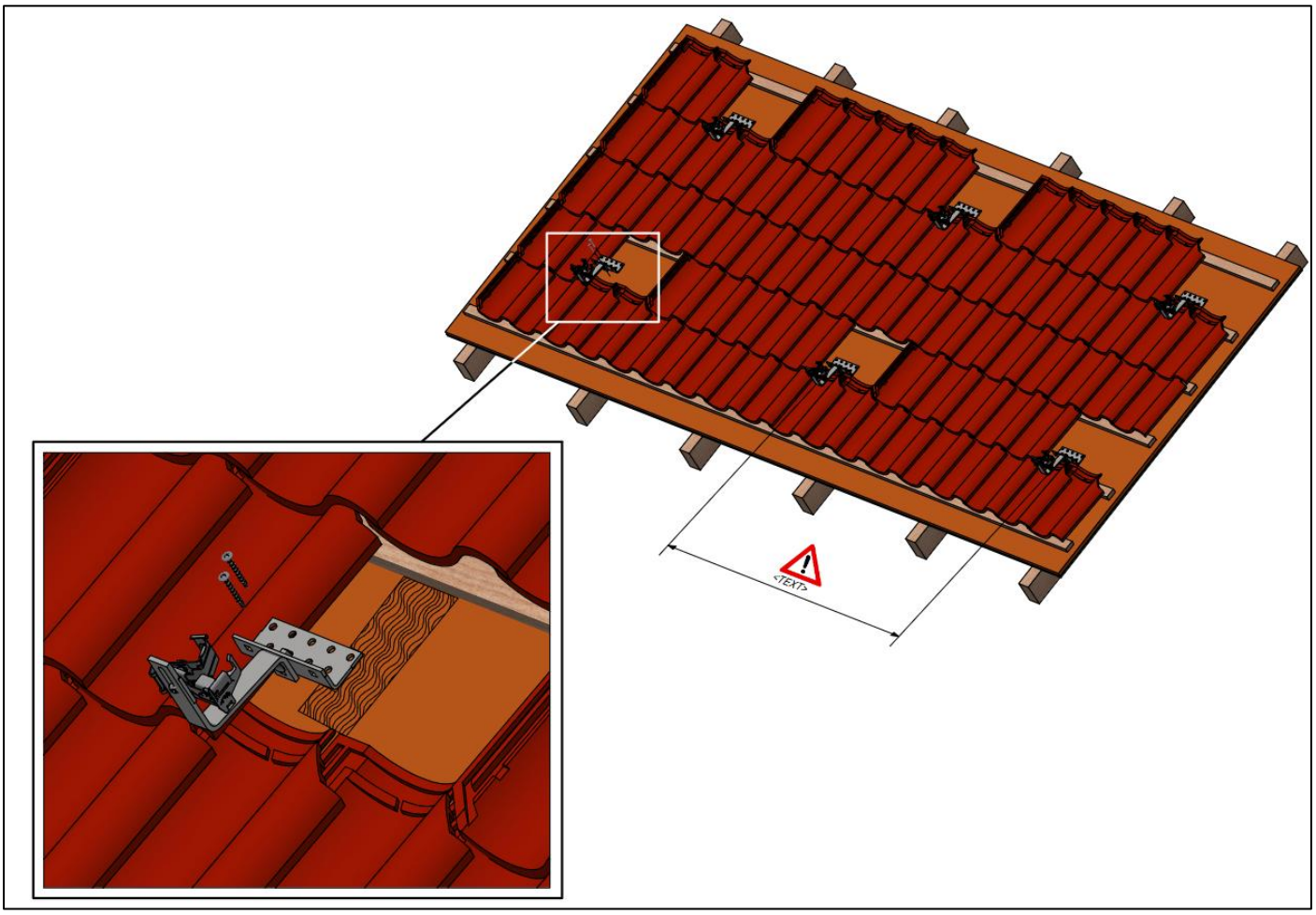

Check the ValkPVplanner project report for the required amount of roof hooks and maximum distance between the roof hooks.

It is important that the roof hooks have a 3mm clearance from the roof tile. This prevents the roof tile from breaking under heavy loads (see image below).

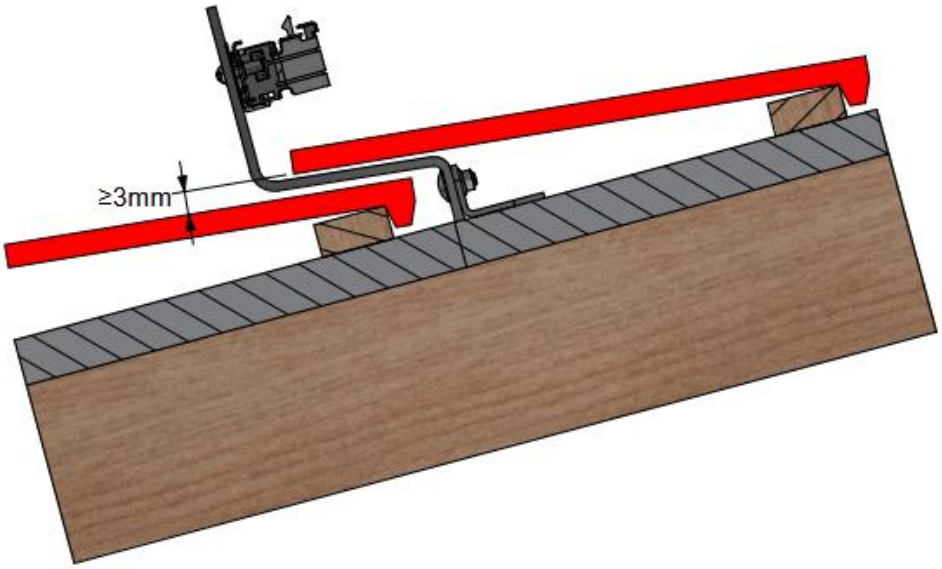

Installation and coupling of ValkAce profiles

ValkAce profiles

Once the roof hooks are in place, the profiles can be installed. The profiles are placed in the steel brackets on the tip of the roof hooks. The profiles can be placed in a horizontal or vertical direction, depending on the desired orientation of the solar panels. When the profile is in the correct position, it can be fastened to the bracket by tightening the bolt on the underside of the bracket (use Torx T30).

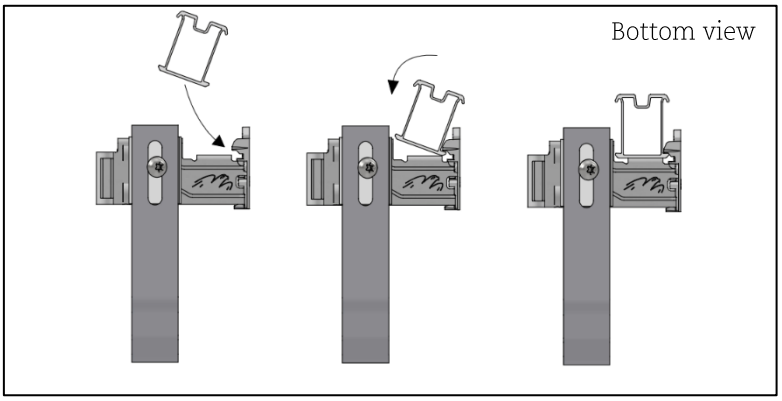

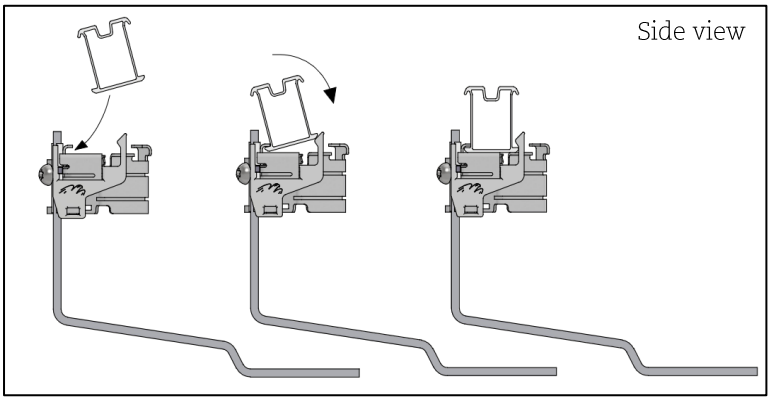

Full line (Blue) – profile in vertical position for landscape orientation of the solar panels.
Dashed line (Green) - profile in horizontal position for portrait orientation of the solar panels.

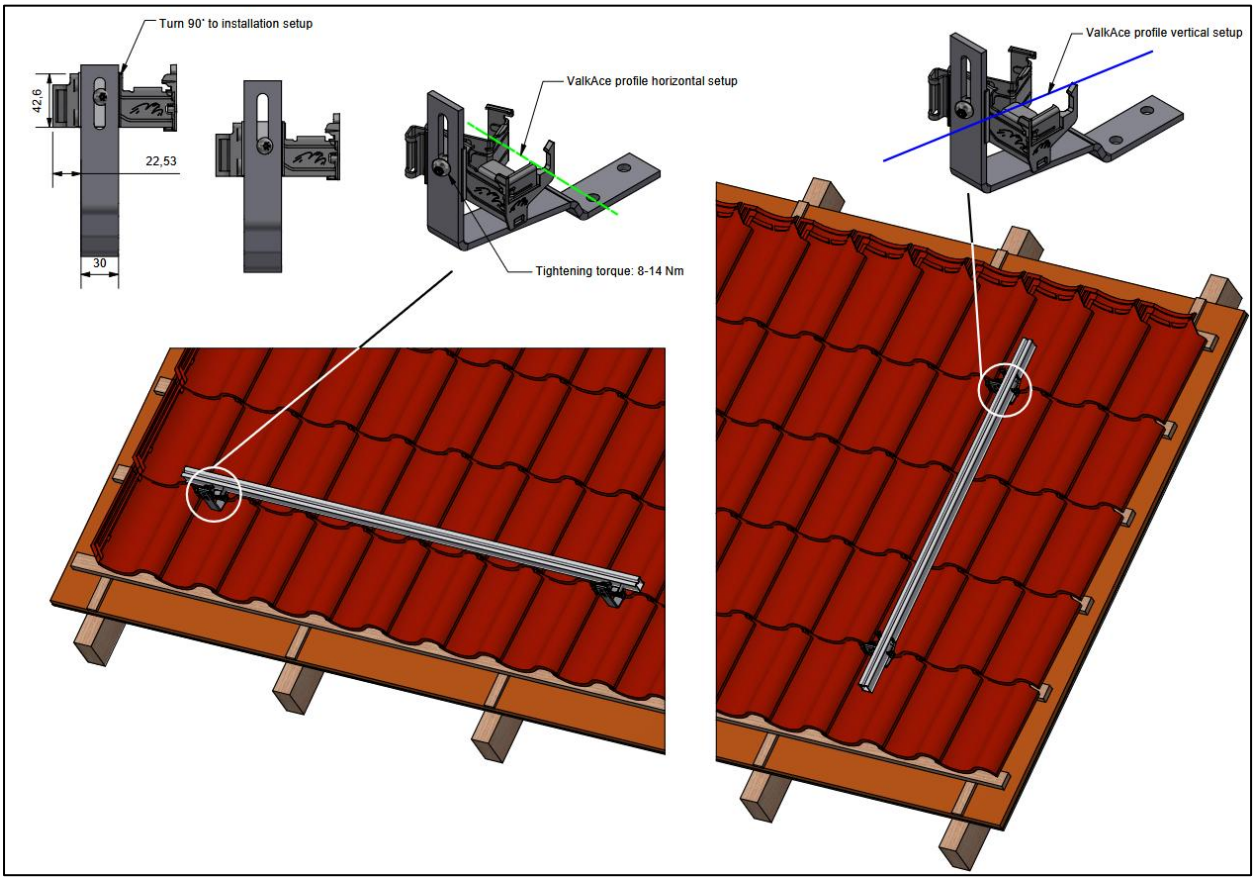

It is prohibited to stand, hang or lean on the profiles.

Once the aluminium profile is properly aligned, the profile can be fixed by fastening the bolts on the underside of the remaining roof hooks. The required torque range is 12-14 Nm.

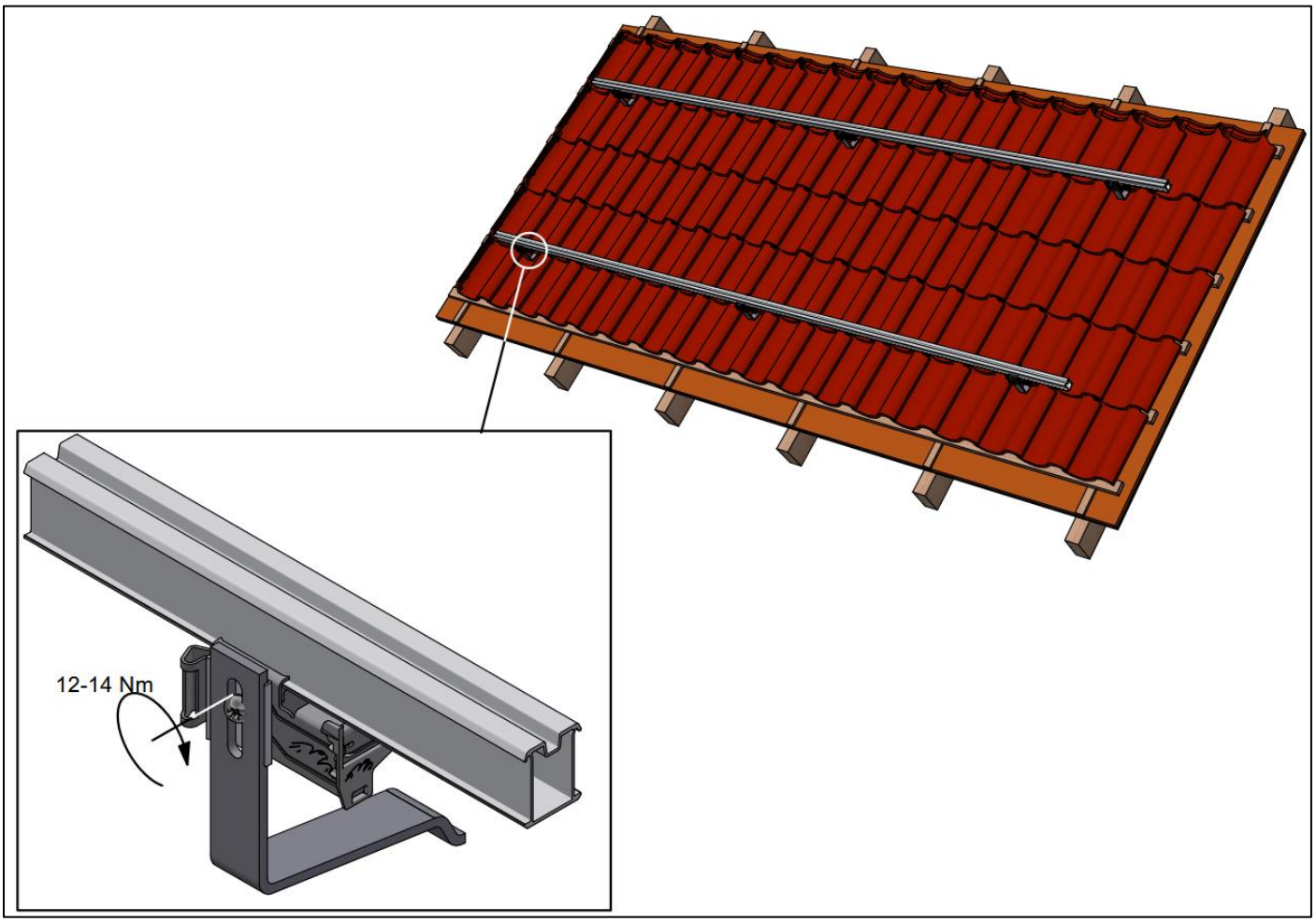

Dilatations

To allow sufficient room for the mounting system to expand and contract due to temperature changes, the system has limitations for the maximum coupled lengths of profile. A “dilatation” is required every 30 meters. The minimal gap distance between the profiles at the dilatation is 150 mm.

Coupling of ValkAce profiles

Two ValkAce profiles can be connected by using the steel coupling profile (749502). The coupling can be inserted in both ends of the aluminium profiles, after which the aluminium profiles are pushed towards each other. The coupling has a stop at the underside, to ensure the coupling profile has equal length in both profiles for maximum strength.

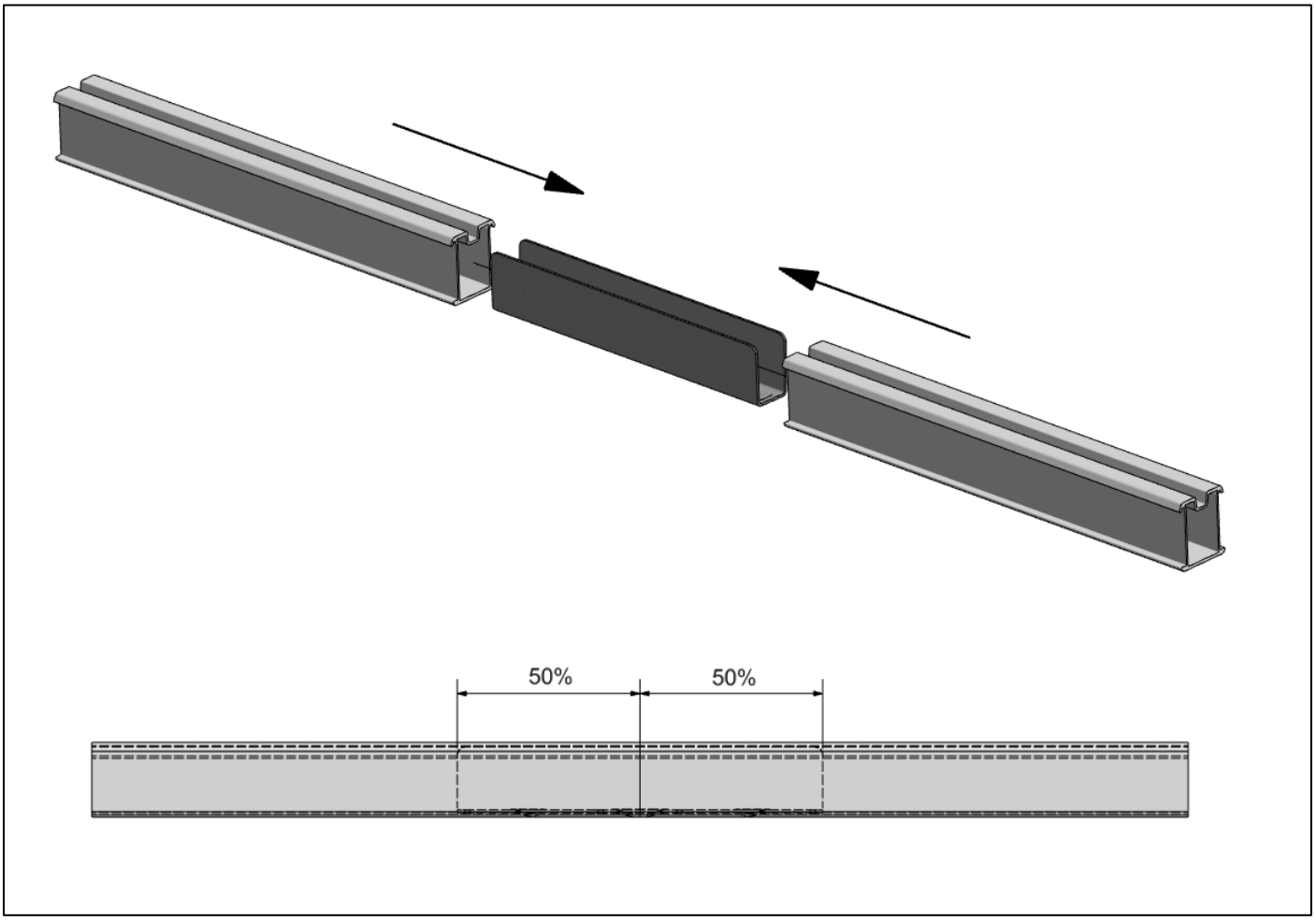

If, after attaching profiles to the roof hook, a space of no more than 3 mm is created between the profiles, correct coupling is still guaranteed.

Cable Management

ValkAce cable and connector clip (739061)

The ValkAce cable and connector mounting clip (739061) can be used for safe and neat fixation of cables and connectors.

Each mounting clip has room for the following items:

4x cable Ø 6,5mm
1x cable Ø 10mm
1x cable Ø 12mm
2x MC4 connector

The mounting clip can be clicked onto the ValkAce profile in any preferred position.

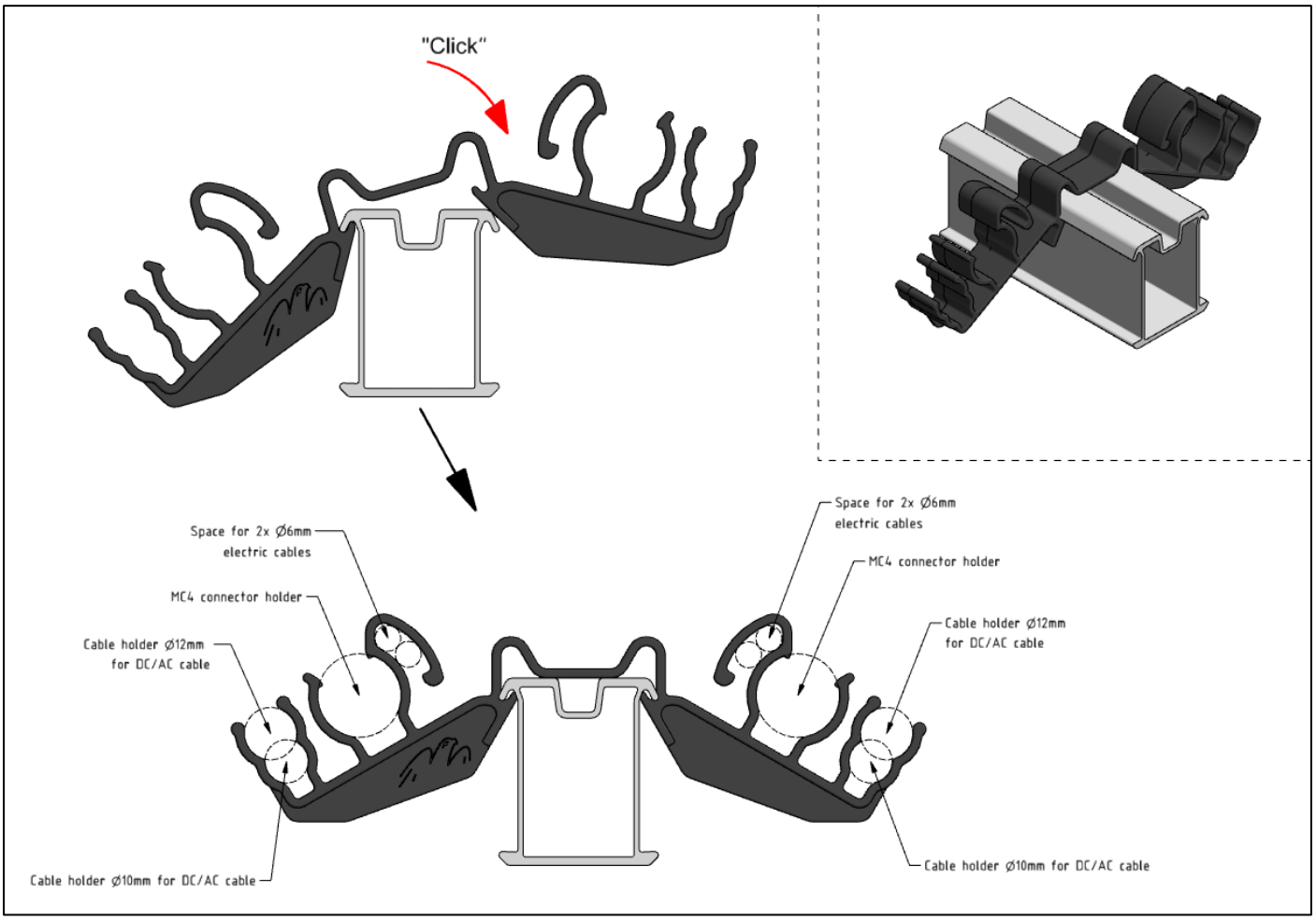

Plastic cable entry for roof tiles (739063)

The plastic cable entry (Art. 739063) allows cables to be fed through roof tiles in a neat and safe manner. It protects cabling from sharp tile edges and keeps cables separated.

The cable entry can be hung behind the tile and the cables can then be pushed into the grooves.

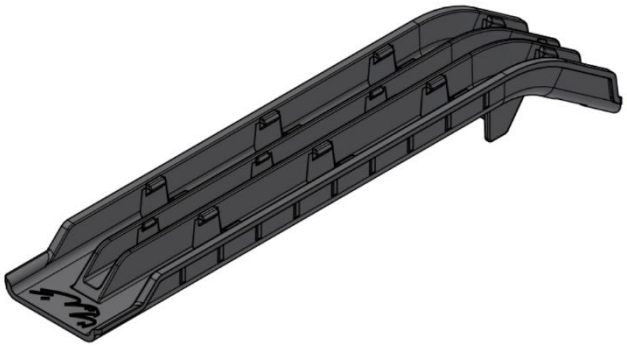

The cable entry provides space for:
2 cables – Ø6mm
1 cables – Ø4mm

Micro-inverters

ValkAce micro-interverclip

Fixation of micro-inverters to the ValkAce system is fast and easy. The mounting clip (739062) in stainless steel is positioned over the profile on one side and then pushed downwards on the other side. See image for reference. The “click” sound ensure the clip is well positioned. The clip can be placed in any preferred position on the profile.

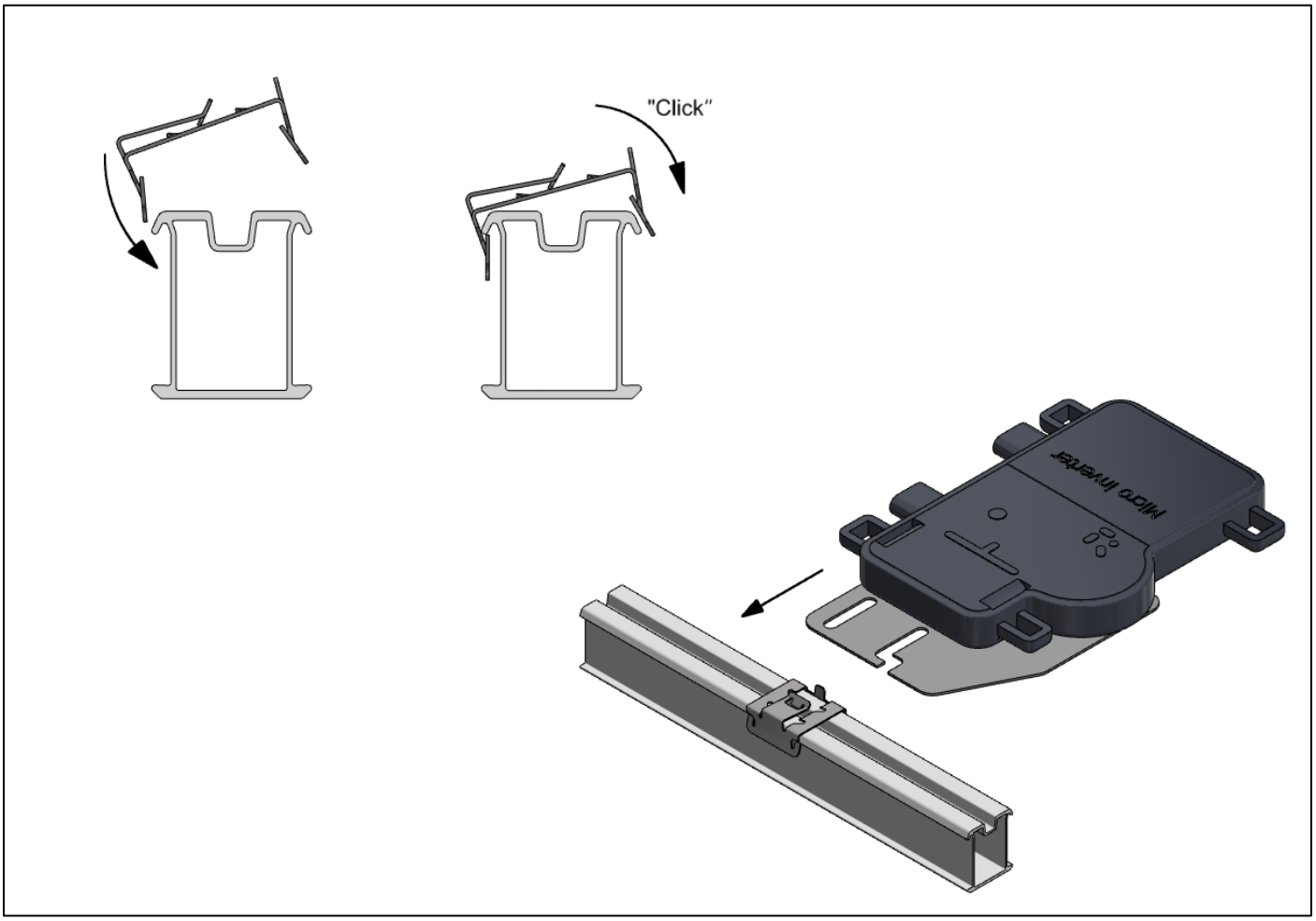

The fixation plate of the micro-inverter can then slide underneath the leg of the mounting clip and is fastened by a “click”.

ValkAce inverter clamp (721440)

Inverters can be mounted straight onto the ValkAce profile using the inverter clamp (721440)

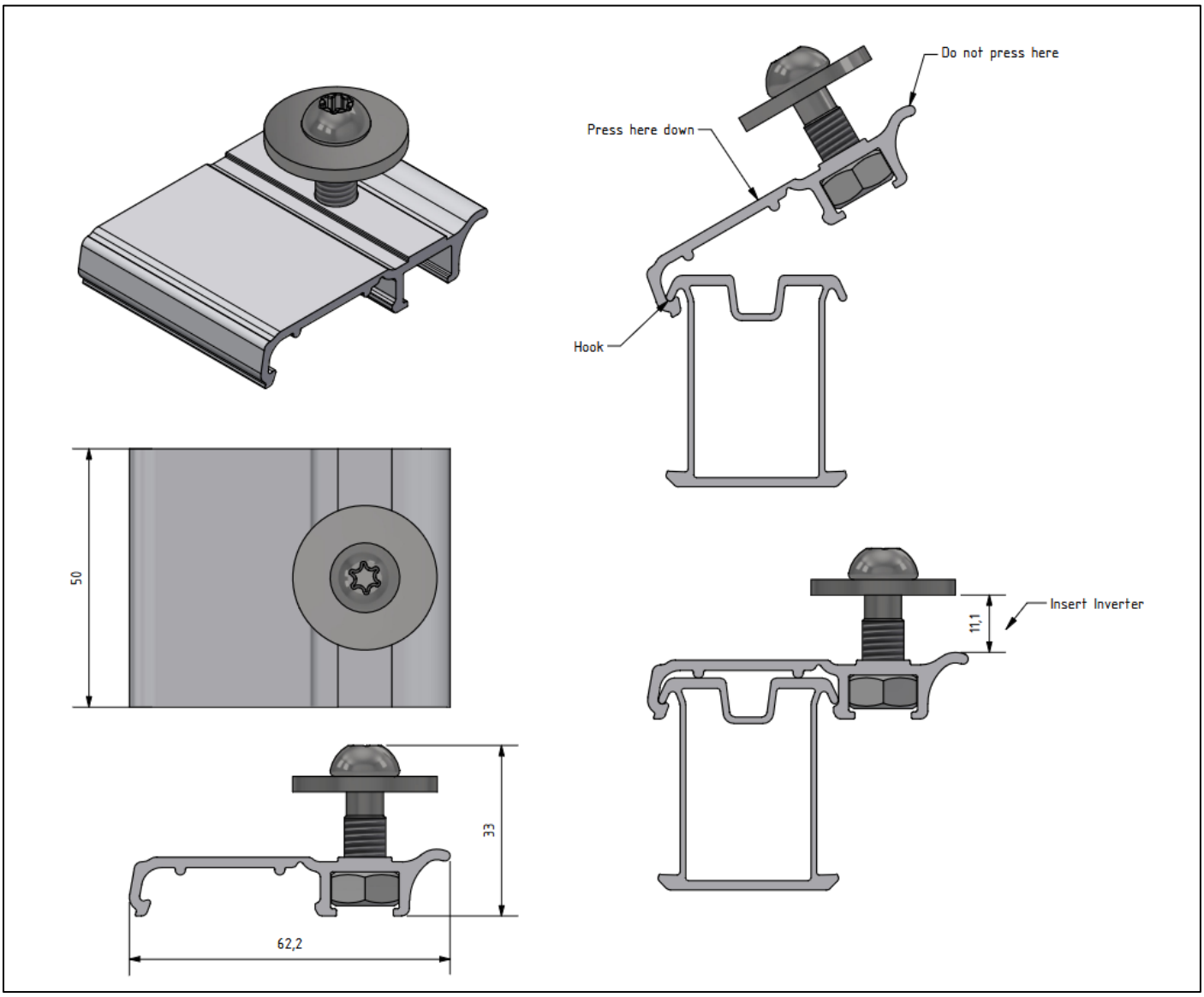

Mounting panel clamps

ValkAce panel clamp side

Each end of the panel row is fixed by the end clamps (721412). The end clamps can be easily clicked onto the profile. The end clamps have a range for the panel frame thickness of 25-40 mm.

Removing the clamp from its 'lock' makes it even easier to click onto the profile.

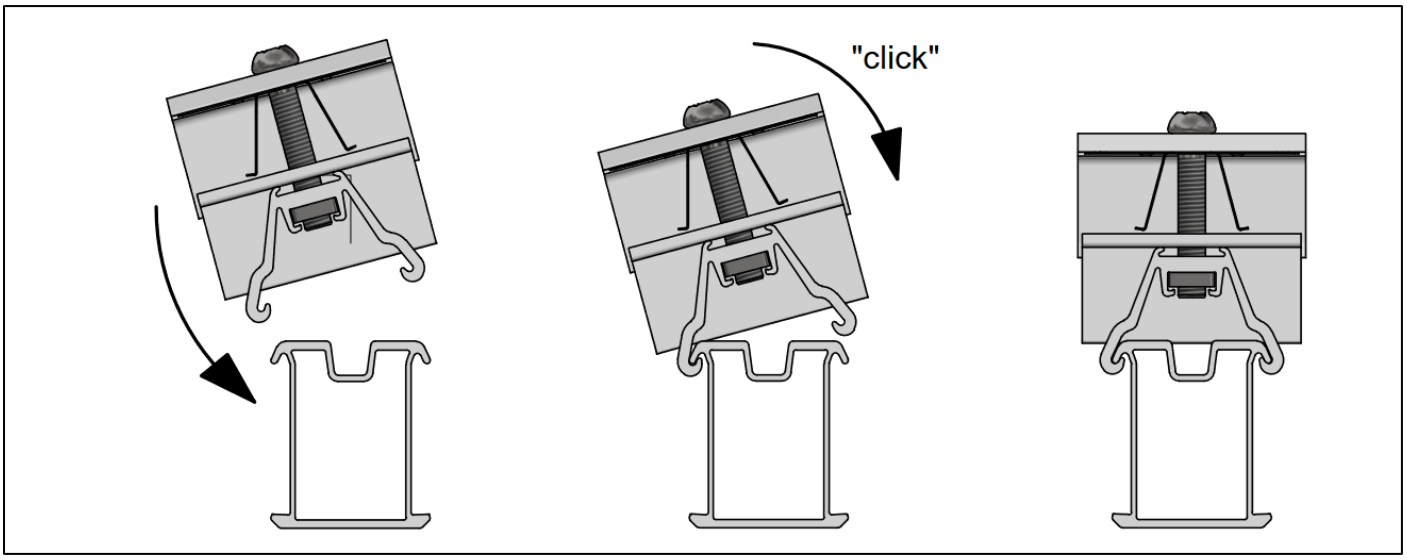

Set the end clamp to the correct height by placing the top plate in the slot corresponding with the panel frame thickness. See image below.

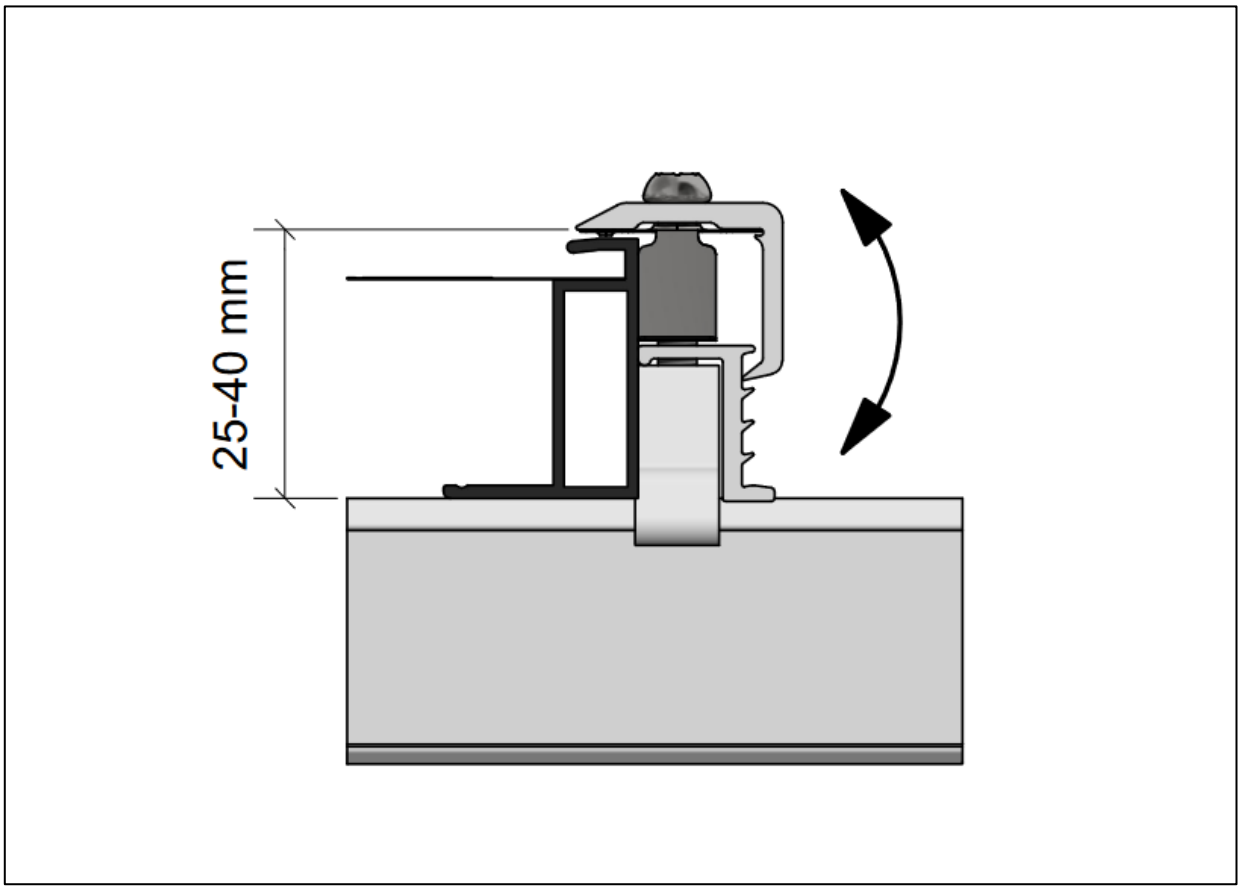

Fix the clamp with the bolt (Torx T30) at torque 6-7 Nm.

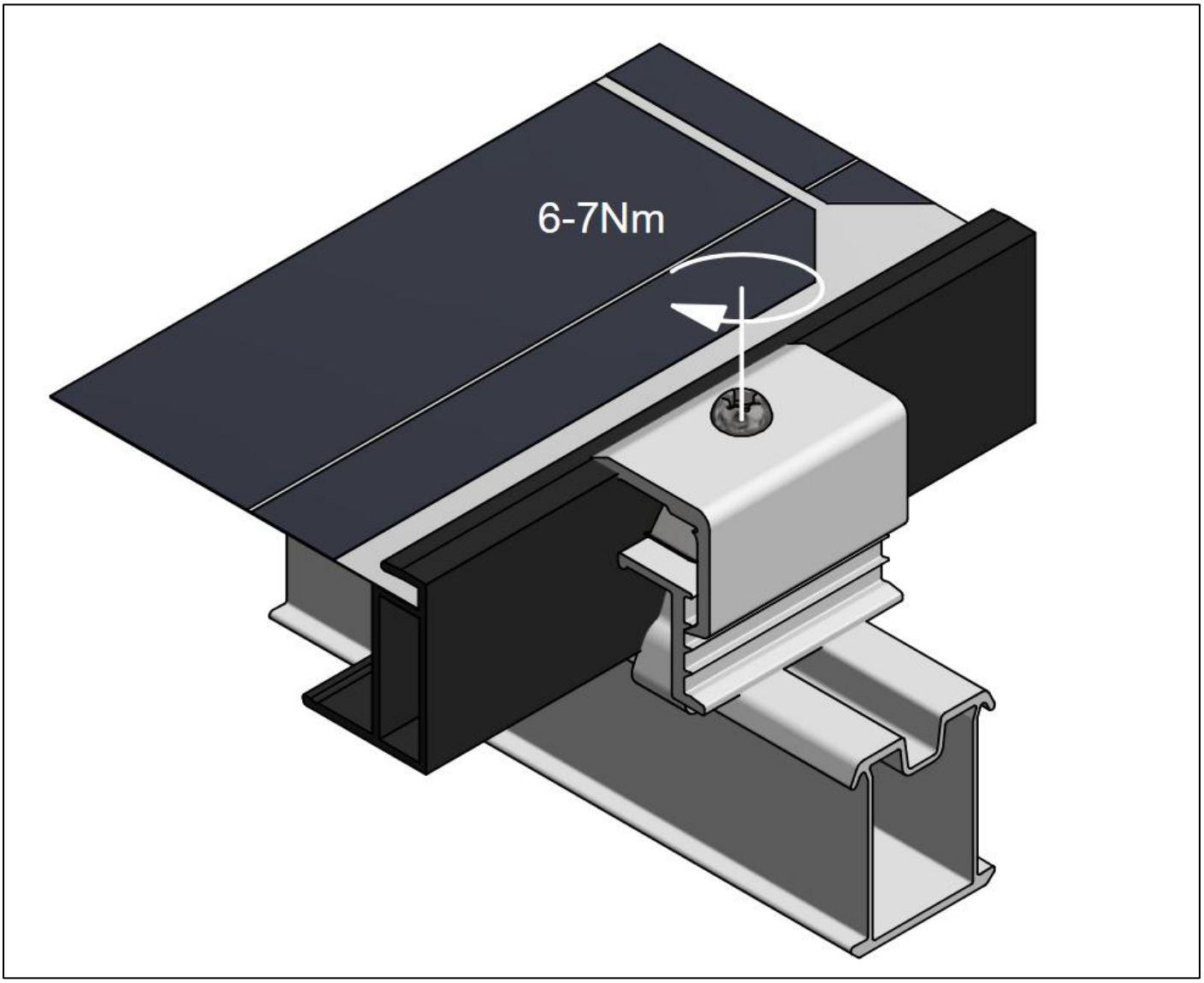

ValkAce panel clamp middle

The middle clamps are mounted the same way as the end clamps, only the height of the clamp is not set to a certain height. Click the middle clamp onto the profile and place the panel frames against the clamp.

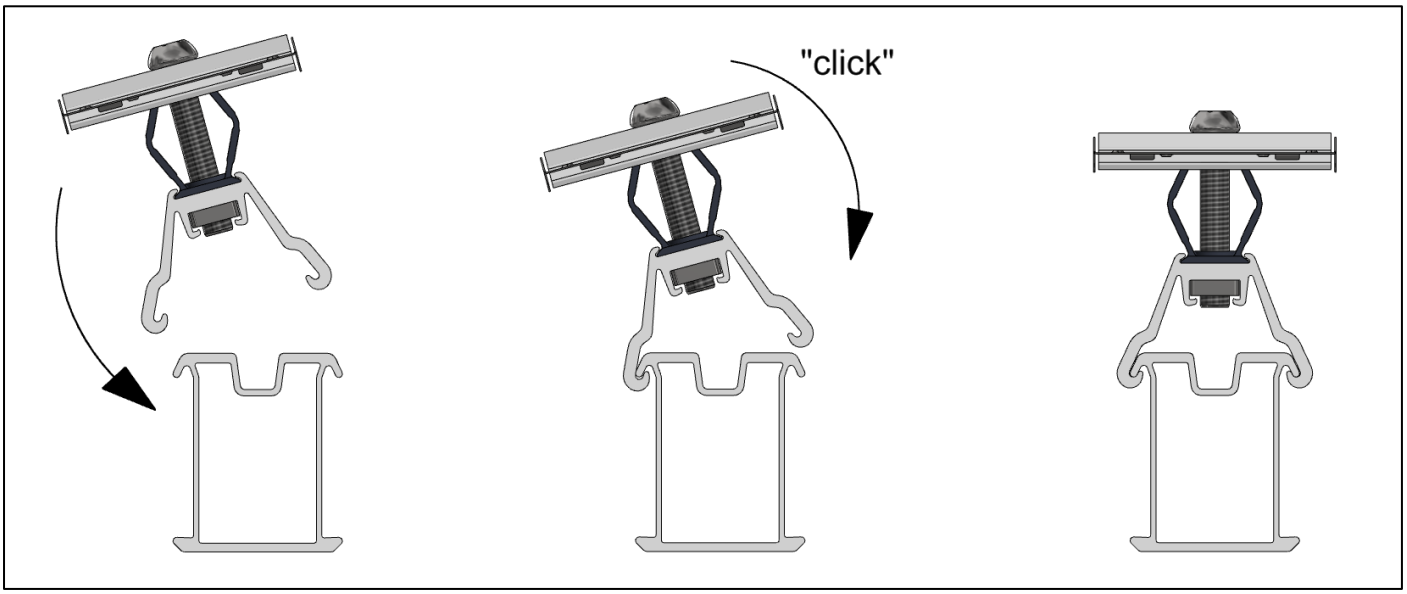

Once the panels and middle clamps are correctly in place, fix with the bolt (Torx T30) (torque 6-7 Nm)

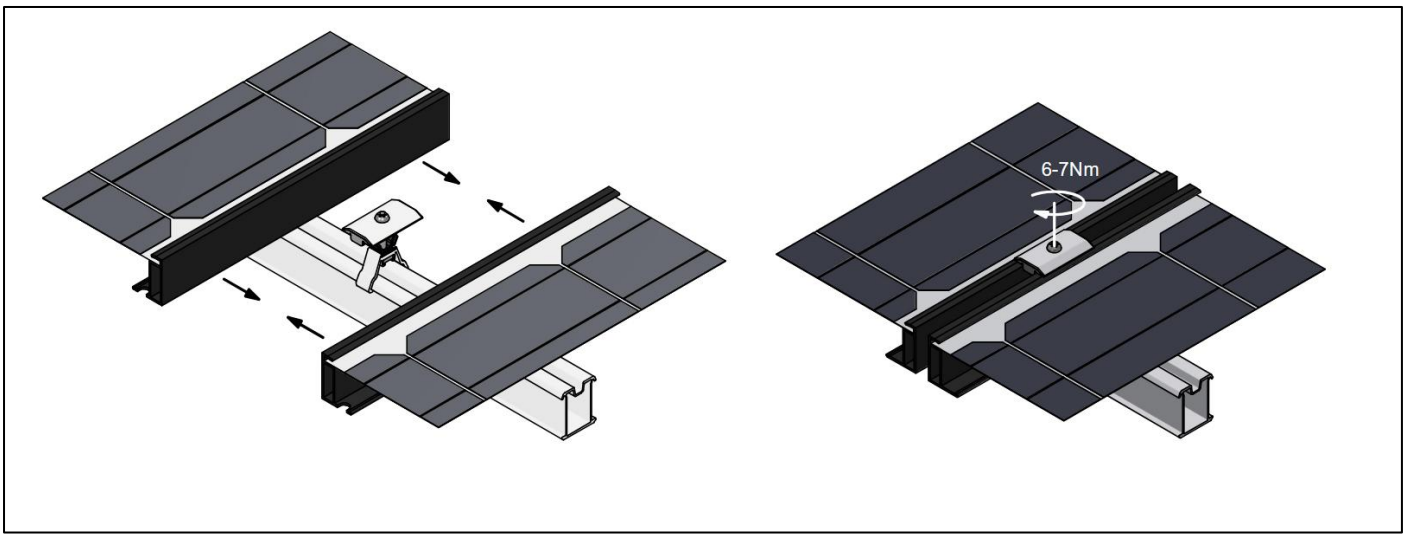

Mounting end caps ValkAce

The end caps ValkAce (729505) are placed over the ends of the aluminium profiles. The end caps cover both the end of the profiles as the sides of end clamps. To mount the end caps properly the profile must have the correct length: the end of the profile must be 30-60mm measured from the side of the panel frame to the end of the profile.

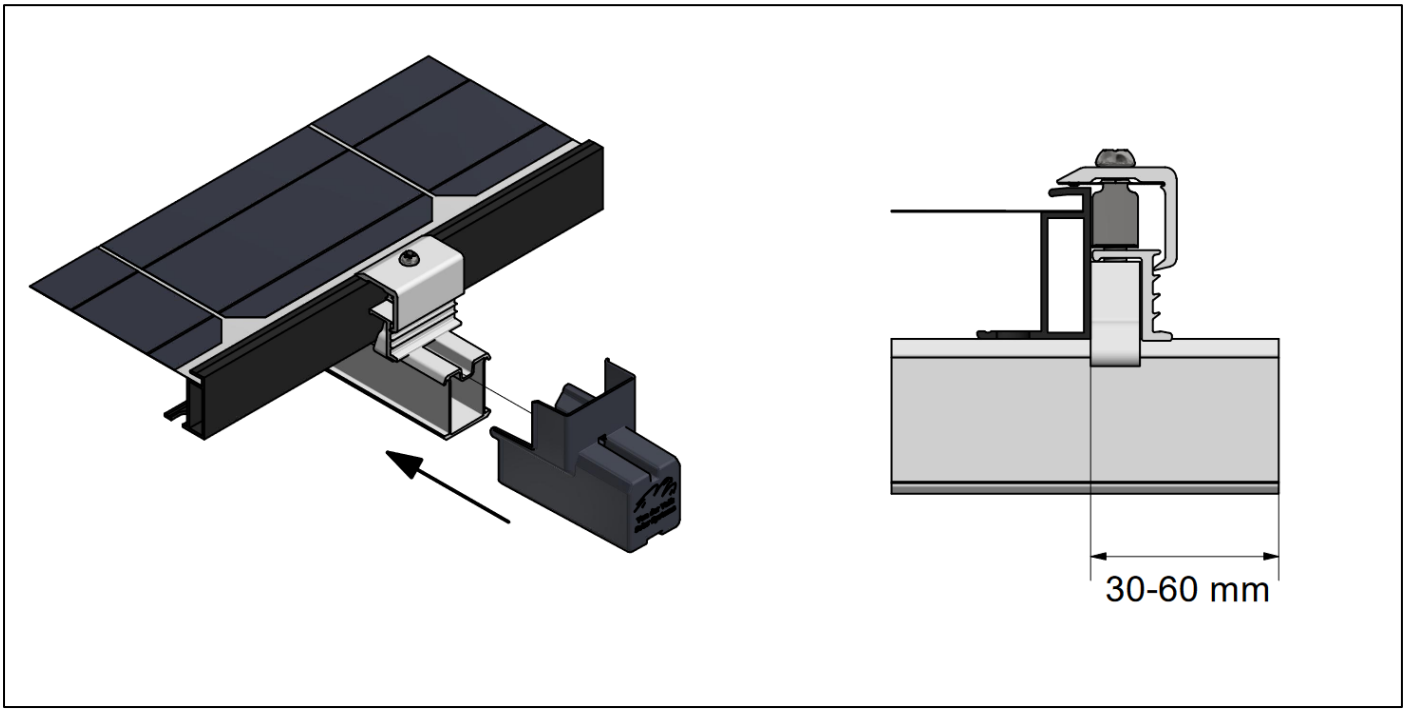

Mounting of additional components

Van der Valk Solar Systems for pitched roofs offers an extensive range of components that make installation and use easier and even better. A selection of these components are shown below.

Panel alignment pin (733020)

The panel alignment pins can be used only for installations where the mounting profiles are placed in horizontal direction. The panel alignment pins are to be pre-mounted to the panel frame (two per panel). Once the alignment pins are in place, the solar panel can rest on the aluminium profile during installation. This ensures both hands are free to fasten the panel clamps, without the need to keep the panel in place at the same time.

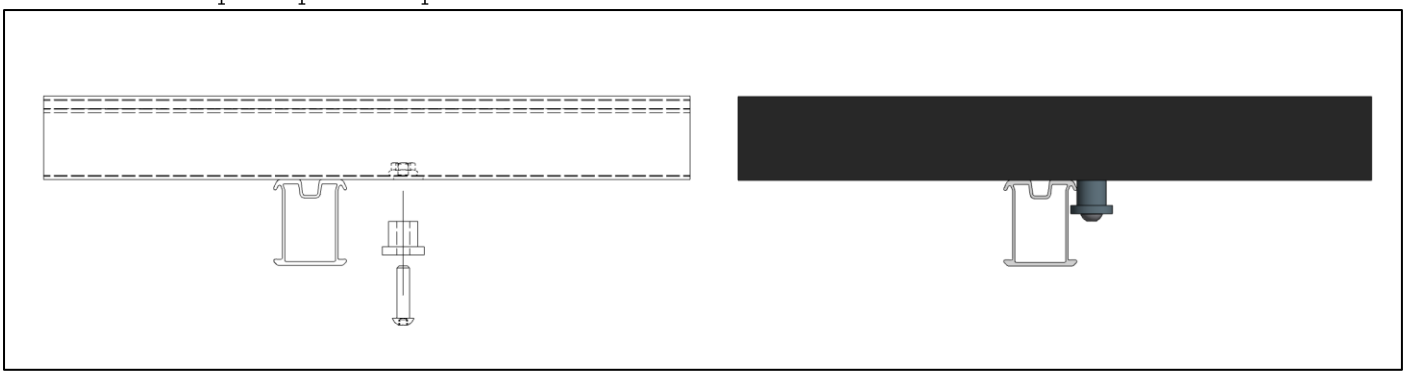

Ss. cable clamp small (732001)

This cable clamp can be mounted to frame on the underside of the solar panel. The cable clamp can hold 1 DC-cable.

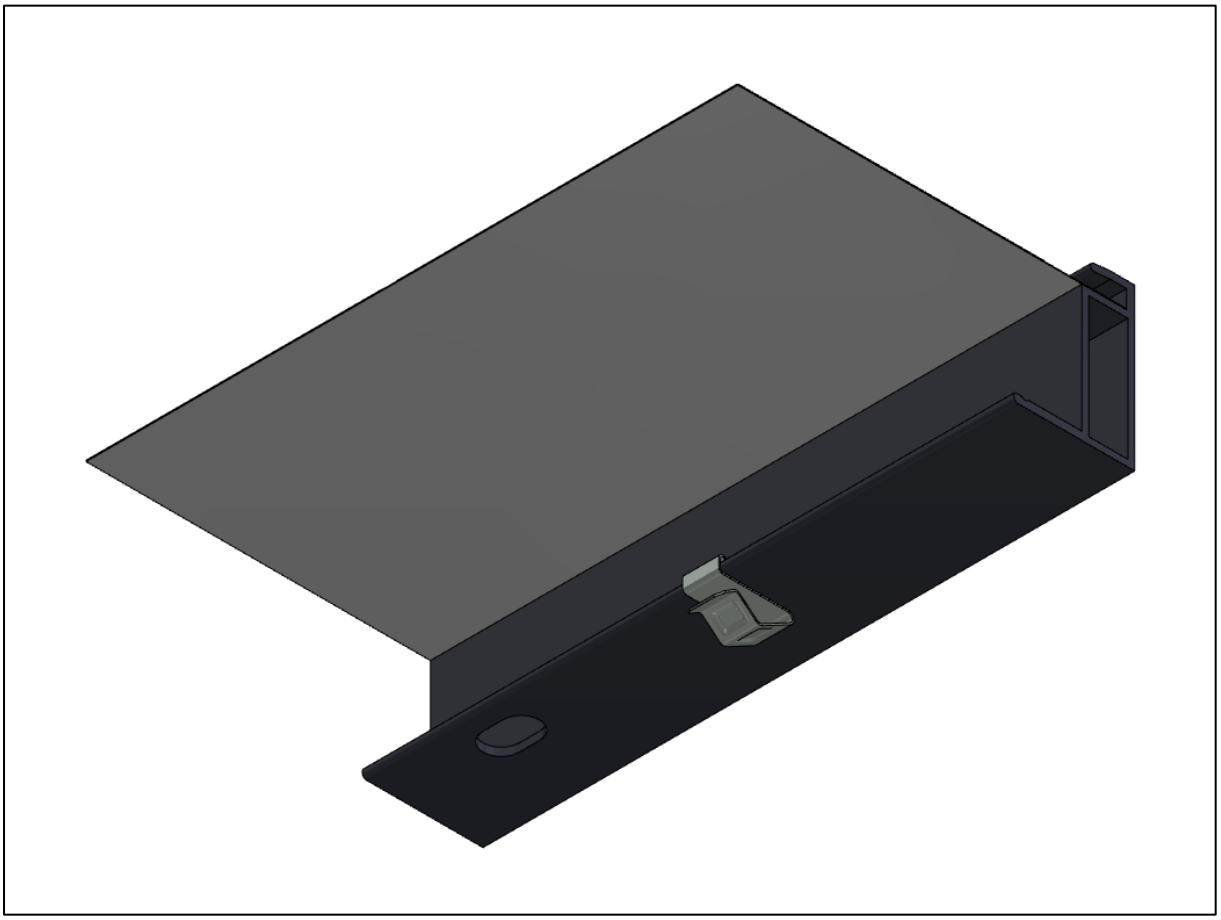

Ss. connector clamp (738201)

The connector clamp (738201) can be mounted to panel frame on the underside of the solar panel. The clamp has a patented design, which allows the clip to be mounted in two directions (at 0 or 90 degrees). This means the MC4 connector can always be placed in the preferred direction for the cables, which reduces the risk of cable damage. The connector clamp can hold one MC4 connector per clamp.

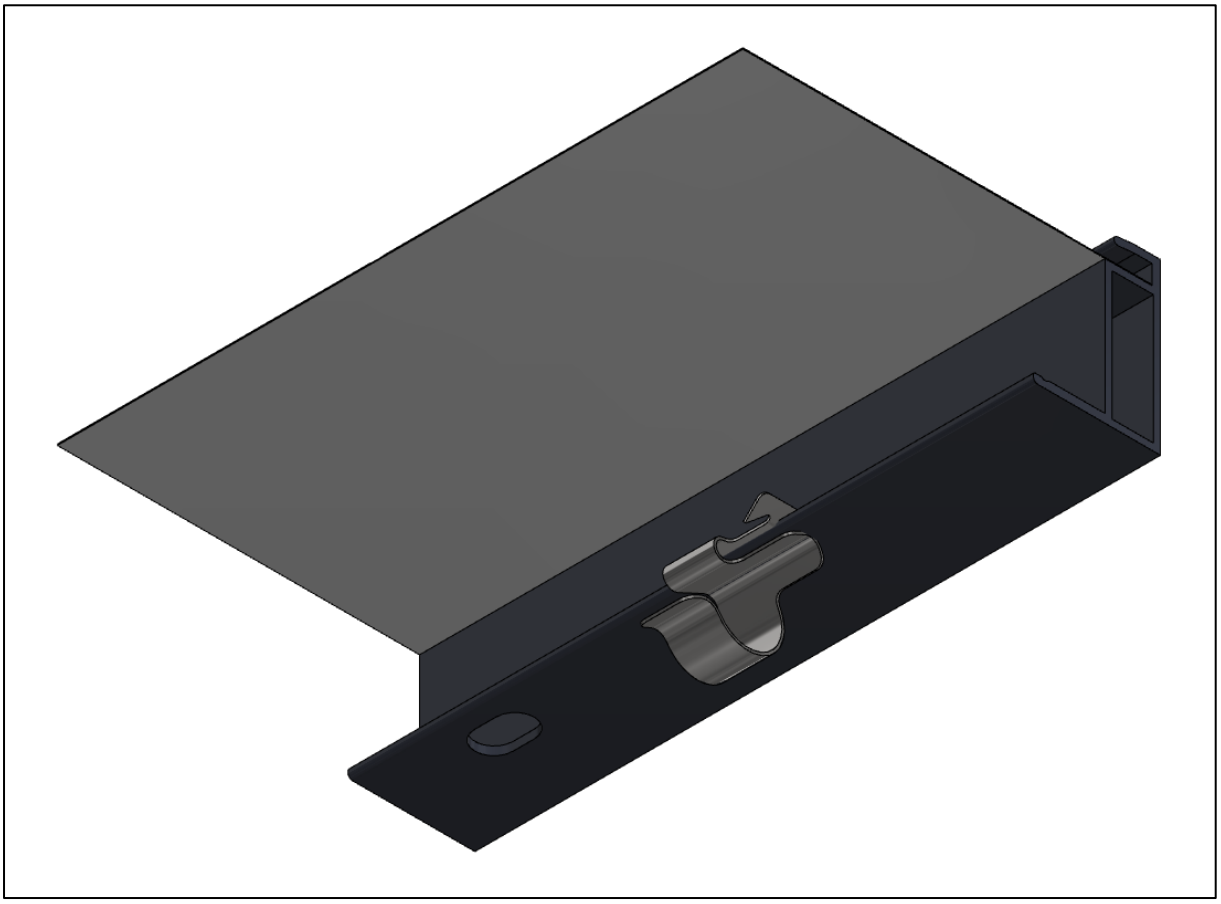

ValkAce Earthing clamp (739064)

The ValkAce system can be grounded by mounting the earthing clamp (739064) onto the ValkAce profile.

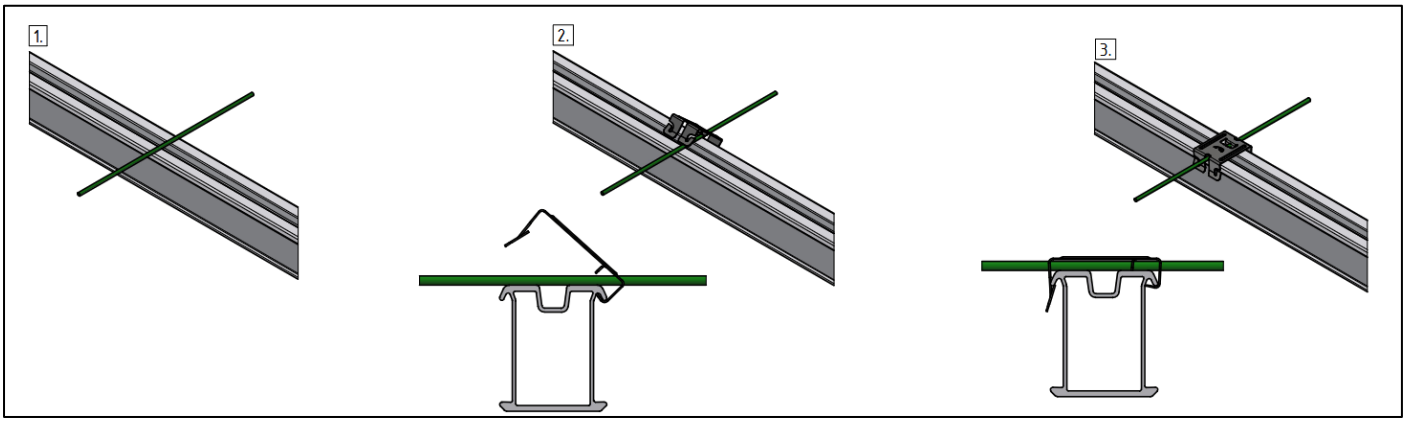

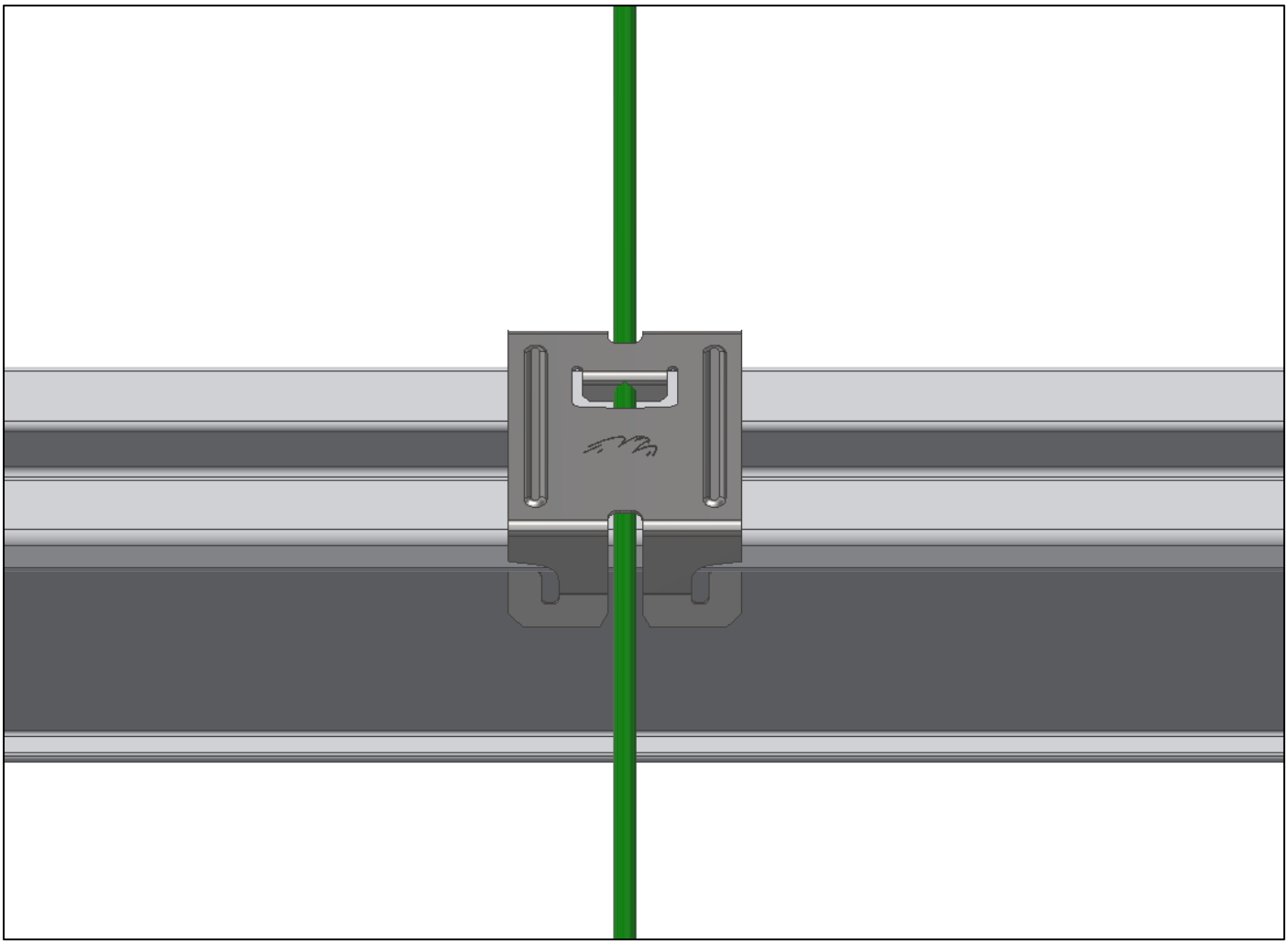

Make sure that the earth clamp is tightened properly so that the sleeve of the earthing wire is definitely cut.
Also make sure the earthing wire runs straight through the two cutting blades.

ValkAce Disassembly tool

The ValkAce middle/end clamps can be disassembled with the Disassembly tool (739065). Slightly lift the clamp on one side with your thumb so that it easily detaches from the profile using the Disassembly Tool.

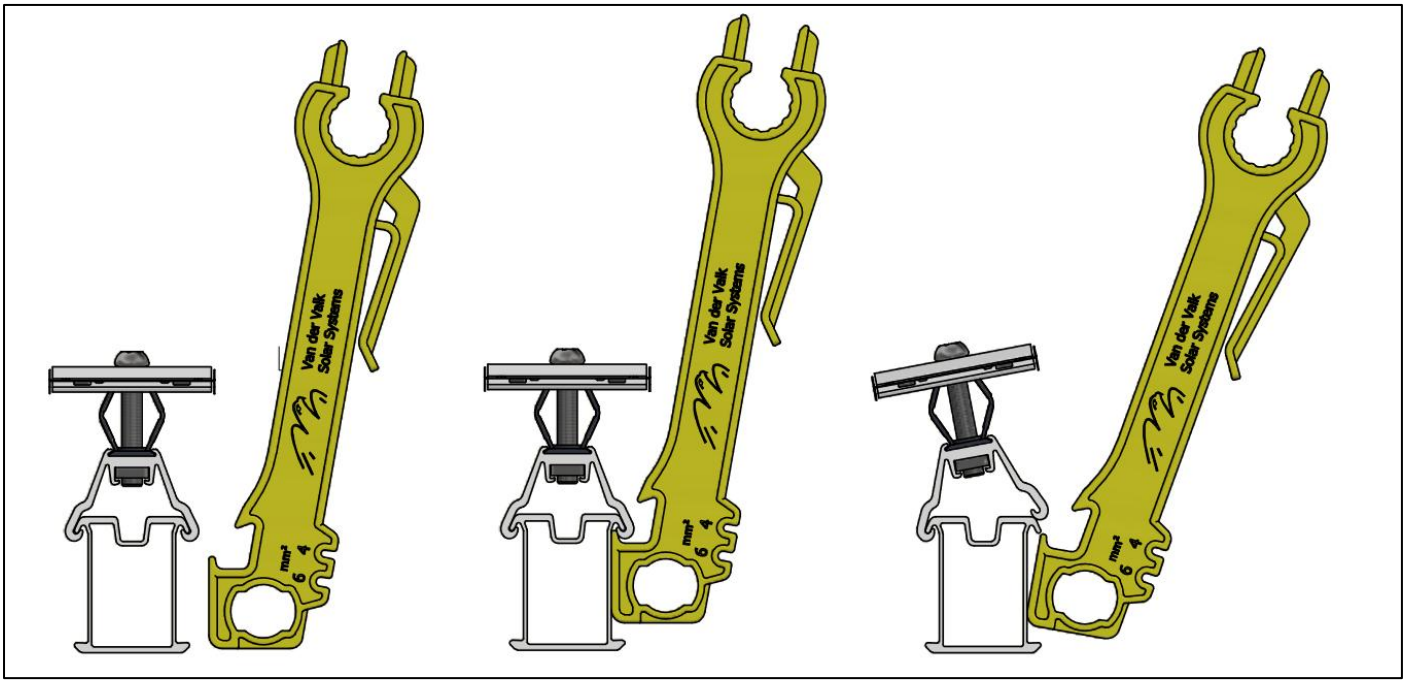

It can also be used for a variety of other things:

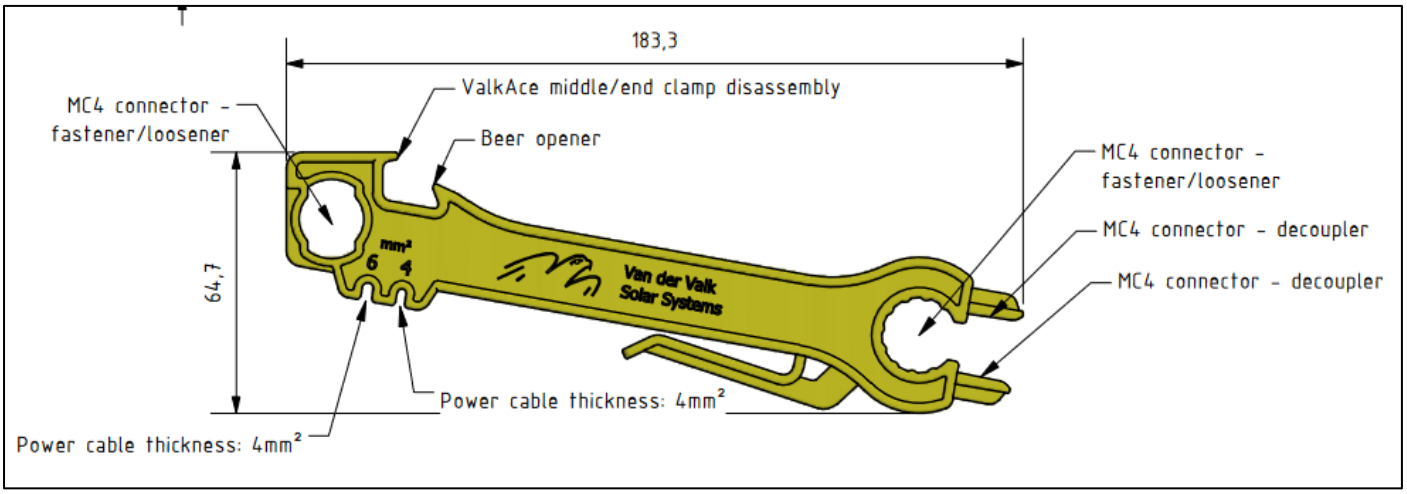

Van der Valk Solar Systems

Van der Valk Solar Systems is since 2009 one of the fastest growing companies in the solar industry and focuses entirely on the development and production of solar mounting systems for pitched roofs, flat roofs and open fields. Van der Valk Solar Systems also has an office and warehouse in the UK, offices in Sweden and Spain and is currently active in 13 countries.

Our mounting systems are developed and produced in our own factory in the Netherlands and stand out thanks to their broad area of application, the very short time in which they can be installed, and the high quality. They are developed according to the latest Eurocodes and therefore comply with the requirements defined for solar systems by banks and insurance companies.

Van der Valk Solar Systems is part of family-owned company Van der Valk Systemen, which has been a household name in the field of moving systems and mounting components since 1963.

Our shared industrial complex in the Netherlands consists of 35.000m2 of offices and factory spaces. Here we use modern machinery and the latest technologies to quickly and accurately develop, manufacture, and test products and systems.

Solar mounting systems & cable management

Flat roofs

Pitched roofs

Cable management

CONTACT DETAILS | **DEVELOPER AND PRODUCER OF SOLAR MOUNTING SYSTEMS**

VAN DER VALK SOLAR SYSTEMS

Van der Valk Solar Systems + *International*
Westernesse 18 - 2635 BG Den Hoorn | The Netherlands
+31 174 25 49 99
sales@valksolarsystems.com

Valk Solar Systems UK + *IE*
+44 1304 89 76 58
sales@valksolarsystems.co.uk

Valk Solar Systems Ibérica
+34 910 787 616
ventas@valksolarsystems.es

Valk Solar Systems Nordics
+46 8 555 85 86 26
sales@valksolarsystems.se

www.valksolarsystems.com