
Tile Carrier

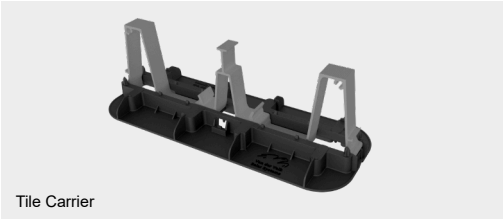
Tile Carrier

Datasheet Tile Carrier

General

The tile carrier ensures the integrity of the roof by evenly distributing the mechanical load across the roof surface

Technical specification

- Maximum ballast capacity of four ballast tiles
- Material consisting of POM and Aluminum
- Optimal nestability and reduced transport costs
- Suitable for all roof types—including PVC
- Simple click system

Product information

Tile Carrier	Image

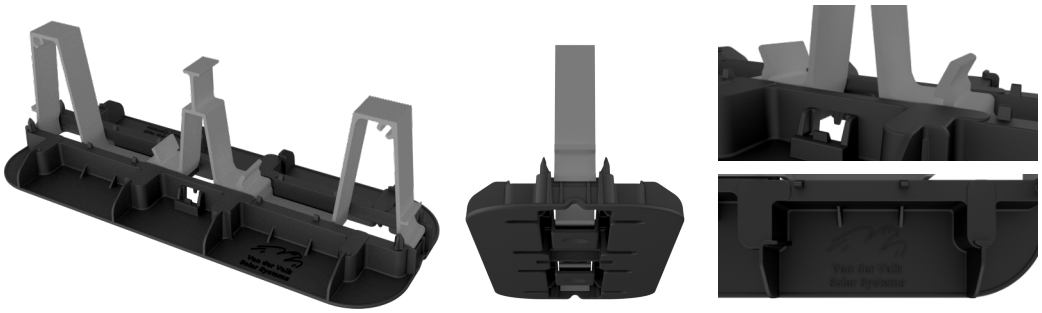

	Dimensions

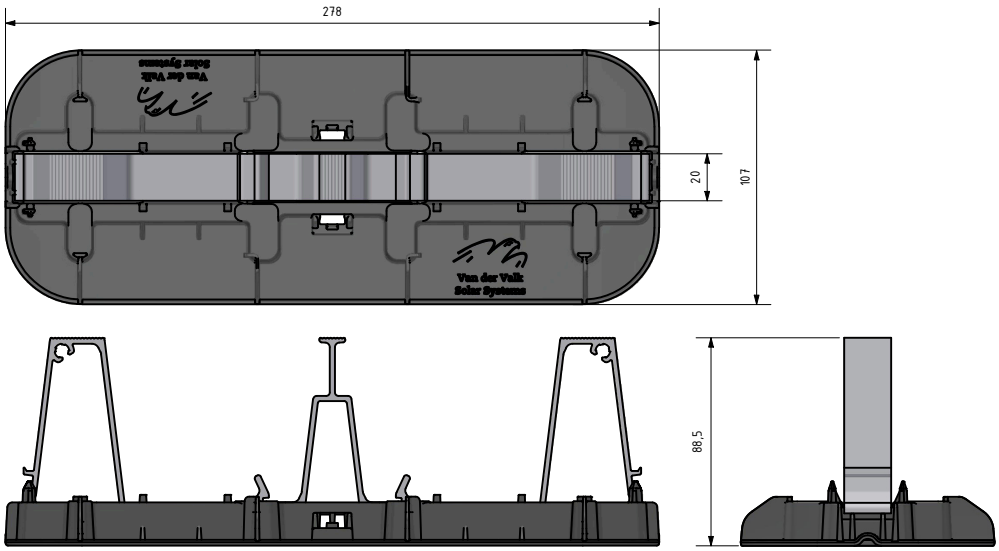

	Tile Carrier
Product number	729636
Weight (kg)	0,18
Package quantity	50
GTIN	08719632528906

Van der Valk Solar Systems B.V.
Galgeweg 46, 2691 MG
's-Gravenzande, the Netherlands
+31 174 25 49 99
sales@valksolarsystems.nl

Valk Solar Systems UK Ltd
+44 1304 89 76 58
sales@valksolarsystems.co.uk

Valk Solar Systems Ibérica SL
+34 910 787 616
ventas@valksolarsystems.es

Valk Solar Systems Nordics AB
+46 8 55 82 86 26
sales@valksolarsystems.se

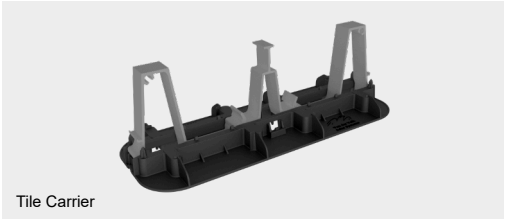
Tile Carrier

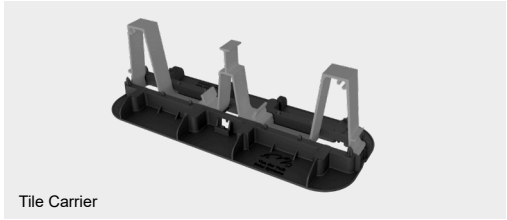
Tile Carrier

Datasheet Tile Carrier

Application

The tile carrier is compatible with the following systems:

- ValkPro+ Max Next Gen
- ValkPro+

Norms

The tile carrier is certified in accordance with the following standards and guidelines:

- EN 1990—Friction test
- EN 1990—Compression test
- EN 1991-1-3
- EN 1991-1-4

Rooftype

The paving support is suitable for the following roof constructions:

- PVC
- Bitumen
- Concrete roof
- Concrete tiles
- EPDM
- Roof cladding
- TPO-FPO
- Fibre glass

Installation method

1

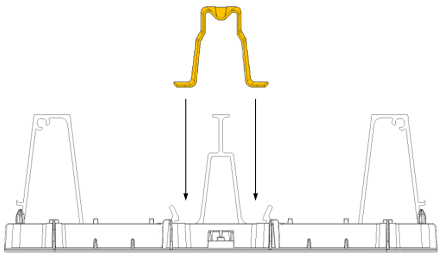

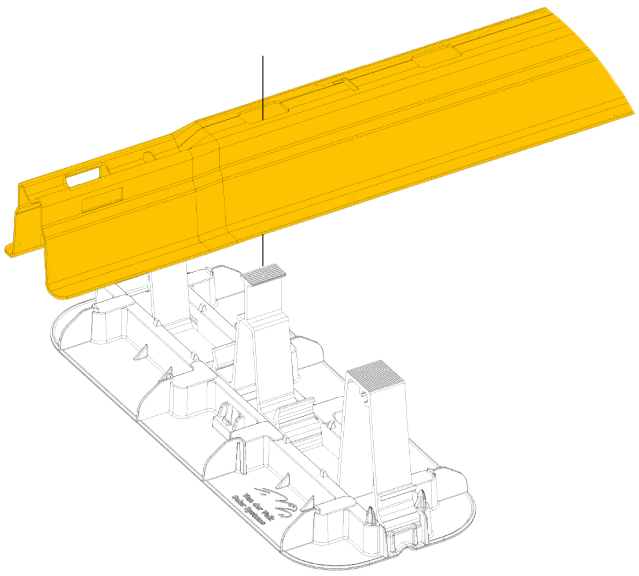

Van der Valk Solar Systems B.V.
Galgeweg 46, 2691 MG
's-Gravenzande, the Netherlands
+31 174 25 49 99
sales@valksolarsystems.nl

Valk Solar Systems UK Ltd
+44 1304 89 76 58
sales@valksolarsystems.co.uk

Valk Solar Systems Ibérica SL
+34 910 787 616
ventas@valksolarsystems.es

Valk Solar Systems Nordics AB
+46 8 55 82 86 26
sales@valksolarsystems.se

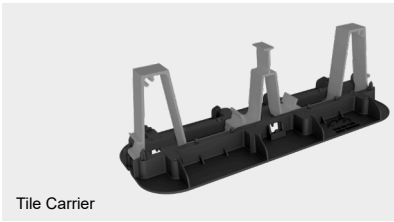
Tile Carrier

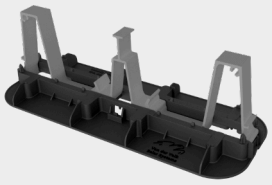
Tile Carrier

Datasheet Tile Carrier

2

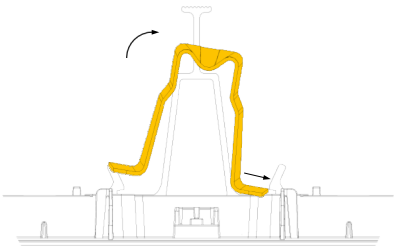

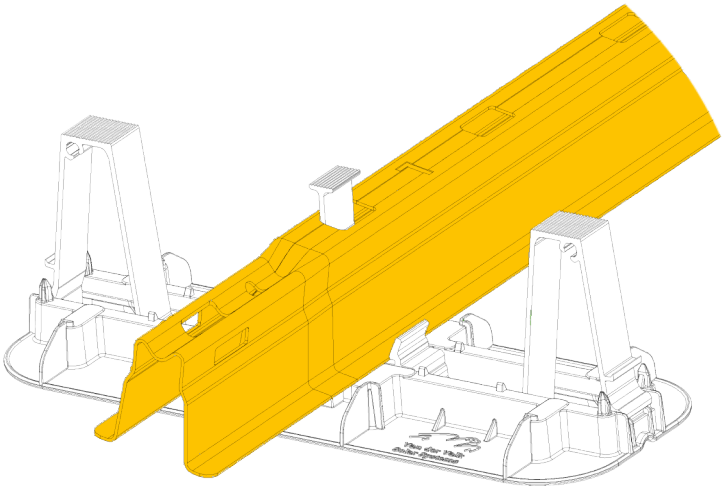

3

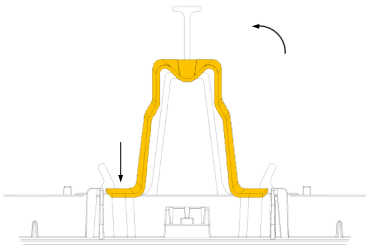

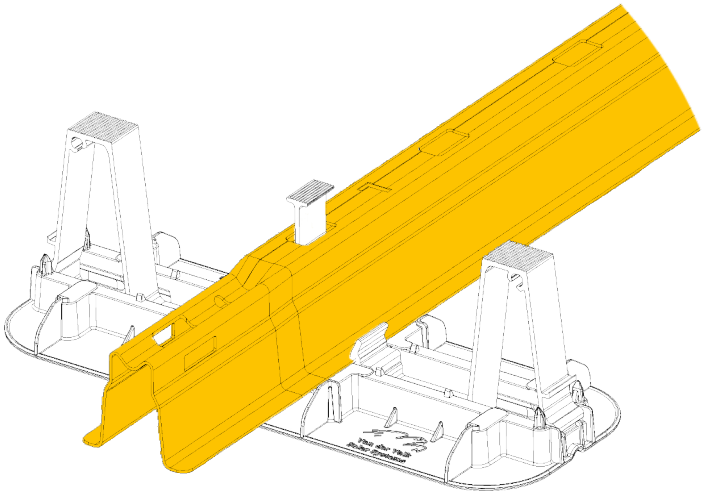

Van der Valk Solar Systems B.V.
Galgeweg 46, 2691 MG
's-Gravenzande, the Netherlands
+31 174 25 49 99
sales@valksolarsystems.nl

Valk Solar Systems UK Ltd
+44 1304 89 76 58
sales@valksolarsystems.co.uk

Valk Solar Systems Ibérica SL
+34 910 787 616
ventas@valksolarsystems.es

Valk Solar Systems Nordics AB
+46 8 55 82 86 26
sales@valksolarsystems.se